BOARD OF FORESTRY AND FIRE PROTECTION
P.O. Box 944246
SACRAMENTO, CA 94244-2460
Website: www.bof.fire.ca.gov
(916) 653-8007

To: Resource Protection Committee

From: Edith Hannigan, Analyst

Date: November 24, 2015

Re: San Diego County 4290 Certification Request

On November 5, 2015, San Bernardino County Fire District submitted their County Fire Code and County Consolidated Fire Code for certification by the Board of Forestry and Fire Protection in lieu of PRC 4290/14 CCR § 1270. The County Fire Code applies throughout the County of San Diego, while the Consolidated Code includes amendments to the County Code that apply in the 16 County fire protection districts. Staff conducted a review of the submitted ordinances and standards and has provided a comparison matrix indicating where each state regulation is addressed in the county codes/standards.

In the Certification Matrix, members will find highlighted regulations where the County standard is different from or in some respect less than the state regulation. Staff requests members evaluate the highlighted County standards and determine whether the Board will accept the standards as meeting or exceeding the state regulation. This specific determination on the highlighted standards will assist staff in communicating any areas of deficiency to San Diego County so they may re-submit, if necessary, ordinances that will fully meet the state regulations.

There are several codes, ordinances, and standards used by San Diego to address fire safe development throughout the county. In the comparison matrix, there is reference to:

- San Diego County Fire Code: attached to this memo
- San Diego County Consolidated Fire Code: attached
- California Fire Code: http://www.ecodes.biz/ecodes_support/Free_Resources/2013California/13Fire/13Fire_main.html
    - Of particular note, Chapter 1: http://www.ecodes.biz/ecodes_support/free_resources/2013California/13Fire/PDFs/Chapter%201%20-%20Scope%20and%20Administration.pdf
    - Chapter 2: http://www.ecodes.biz/ecodes_support/free_resources/2013California/13Fire/PDFs/Chapter%202%20-%20Definitions.pdf
    - Chapter 5: http://www.ecodes.biz/ecodes_support/free_resources/2013California/13Fire/PDFs/Chapter%205%20-%20Fire%20Service%20Features.pdf
- County Fire Authority Emergency Vehicle Turnaround Standard: attached
- Public Works Design Standard 13: attached

A copy of the 2016 SRA Fire Safe Regulations is attached for your reference as well. For ease of reference, relevant section and page numbers of each code are included in the comparison matrix where possible.

California Board of Forestry and Fire Protection
SRA Fire Safe Regulations
Certification Matrix

Without an accompanying letter from the Board of Forestry and Fire Protection, completion of this matrix does not indicate Board certification approval or denial of submitted local ordinances under 14 CCR § 1270.03. This matrix does not reflect the full text of the regulations and should be used as a guide only.

Internal Use Only			
Jurisdiction	Date Received	Board Meeting Date	Board Action
San Diego County	November 5, 2015	December 9, 2015	

CCR Title 14 SRA Fire Safe Regulations	Local Ordinance	Meets or Exceeds
Sec. 1270 Title *Statement of the title of regulation*	California Fire Code (CFC) Section 1.1.1 Title (CFC Chapter 1 – page 3)	
Sec. 1270.01 Purpose *Statement of the purpose of regulation*	CFC Section 1.1.2 Purpose (CFC Chapter 1 – page 3)	
Sec. 1270.02 Scope *Statement of the scope of regulation*	CFC Section 1.1.3 Scope (CFC Chapter 1 – page 3)	
Sec. 1270.03 Local Ordinances *Board may certify local ordinances*	N/A	
Sec. 1270.04 Provisions for Application of These Regulations *How these regulations will be applied*	CFC Sec 102 Applicability (CFC Chapter 1 – page 12) SDCFC Sec 96.1.001 Adoption of Amendments (page 1) SDCCFC Sec 96.1.001 Adoption of Amendments (page 4)	
Sec. 1270.05 Inspection Authority *Establishing responsibility for enforcement*	San Diego County Fire Code (SDCFC) Sec 96.1.004 Responsibility for Enforcement (page 2) San Diego Consolidated County Fire Code (SDCCFC) Sec 96.1.004 Responsibility for Enforcement (page 4)	
Sec. 1270.06 Inspections *Authorization to conduct inspections*	CFC Sec 106.2 Inspections (CFC Chapter 1 – page 22)	
Sec. 1270.07 Exceptions to Standards *Exceptions will be made on a case-by-case basis where the exception provides for same practical effect. Exceptions granted shall be forwarded to the CAL FIRE Unit Headquarters.*	SDCFC Sec 104.8 Modifications (page 5) SDCCFC Sec 104.8 Modifications (page 8)	
Sec. 1270.08 Requests for Exceptions *Requests shall be made in writing, stating the section(s), material facts, the exception proposed, and a map.*	SDCFC Sec 104.8 Modifications (page 5) SDCCFC Sec 104.8 Modifications (page 8)	
Sec. 1270.09 Appeals *Applicants may appeal exception denials. The inspection authority shall be consulted. If an appeal is granted, findings must be made and forwarded to CAL FIRE Unit HQ.*	SDCFC Sec 108 Appeals (page 7) SDCCFC Sec 108 Appeals (page 9)	
Sec. 1271.00 Definitions *Definitions*	CFC Sec 202 Definitions (Chapter 2 – page 29) and 4902.1 Definitions (Chapter 49 – page 363) SDCFC Sec 202 Definitions (page 10) and 4902.1 Definitions (page 37)	

CCR Title 14 SRA Fire Safe Regulations	Local Ordinance	Meets or Exceeds
	SDCCFC Sec 202 Definitions (page 13) and 4902.1 Definitions (page 49)	
Sec. 1271.05 Distance Measurements *Distance measurements are along the ground.*	SDCFC Sec 202 Definitions (page 10) and 4902.1 Definitions (page 37) SDCCFC Sec 202 Definitions (page 13) and 4902.1 Definitions (page 49)	
Sec. 1272.00 Maintenance of Defensible Space Measures *Defensible space maintenance plans shall be provided.*	SDCFC Sec 4907.3 Maintenance of Defensible Space (page 43) SDCCFC Sec 4907.3 Maintenance of Defensible Space (page 56)	
Sec. 1273.00 Intent *Unobstructed traffic circulation during a wildfire emergency and concurrent fire equipment and civilian movement.*	SDCFC Sec 503.1 General (page 18) SDCCFC Sec 503.1 General (page 22)	
Sec. 1273.01 Road Width *Roads shall have a minimum of two 10-foot traffic lanes, not including shoulder and striping.*	SDCFC Sec 503.2.1 Dimensions (page 20) SDCCFC Sec 503.2.1 Dimensions (page 25)	
Sec. 1273.02 Roadway Surface *Designed and maintained to support the imposed load of fire apparatus weighing at least 75,000 pounds; provide an all-weather aggregate base; project proponent shall provide engineering specifications to support design if requested.*	SDCFC Sec 503.2.3 Surface (page 21) SDCCFC Sec 503.2.3 Surface (page 26)	
Sec. 1273.03 Roadway Grades *The grade of roads shall not exceed 16%.*	SDCFC Sec 503.2.7 Grade (page 22) and Sec 503.2.3 Surface (page 21) SDCCFC Sec 503.2.7 Grade (page 27) and Sec 503.2.3 Surface (page 26) Sec 503.2.7 allows grades up to 20% with mitigation, otherwise requirement is 15%	
Sec. 1273.04 Roadway Radius *Horizontal inside turning radius minimum 50 feet; additional 4 foot with added to curves of 50 to 100 foot radius; additional 2 feet shall be added to curves from 100 to 200 feet. Vertical curves no less than 100 feet.*	SDCFC Sec 503.2.4 Roadway Radius (page 21) SDCCFC Sec 503.2.4 Roadway Radius (page 26)	
Sec. 1273.05 Roadway Turnarounds *Required on driveways and dead-end roads. Minimum turning radius shall be 40 feet, not*	SDCFC 503.2.5 Dead Ends (page 21) SDCCFC 503.2.5 Dead Ends (page 26) County Fire Authority Emergency Vehicle Turnaround Standard	

CCR Title 14 SRA Fire Safe Regulations	Local Ordinance	Meets or Exceeds
including parking. *The top of the "T" in a hammerhead/T turnaround shall be 60 feet.*		
Sec. 1273.06 Roadway Turnouts *Shall be a minimum of 12 feet wide, 30 feet long, and a 25 foot taper at both ends.*	SDCFC Sec 503.2.8 Roadway Turnouts (page 22) SDCCFC Sec 503.2.8 Roadway Turnouts (page 27)	
Sec. 1273.07 Roadway Structures *Designed to carry maximum load according to CVC; must have signage posting maximum weight and height; constructed and maintained according to AASHTO HB-17; one-way bridges must have unobstructed visibility and turnouts each end.*	SDCFC Sec 503.2.6 Bridges and Elevated Surfaces (page 21) SDCCFC Sec 503.2.6 Bridges and Elevated Surfaces (page 27)	
Sec. 1273.08 One-Way Roads *All one way roads will have a minimum 12 foot traffic lane, not including shoulders. All one-way roads shall connect a two lane roadway at both ends. Maximum access to no more than 10 dwelling units. Maximum length 2,640 feet. Turnout constructed at approximately mid-point.*	SDCFC Sec 503.2.1 Dimensions (page 20) SDCCFC Sec 503.2.1 Dimensions (page 24)	
Sec. 1273.09 Dead-End Roads *The length of dead-end roads is limited, based upon zoning.* *-800 feet for parcel zoned for less than one acre.* *-1320 feet for parcel zoned one to five acres* *-2640 feet for parcel zoned five acres to 20 acres* *-5280 feet for parcel zoned larger than 20 acres*	SDCFC Sec 503.1.3 Dead-end Roads (page 19) SDCCFC Sec 503.1.3 Dead-end Roads (page 23)	
Sec. 1273.10 Driveways *All driveways will provide a minimum 10 foot width traffic lane with a minimum width of 14 feet unobstructed horizontal clearance and vertical clearance of 15 feet. Driveways greater than 150 feet but less than 800 feet shall provide a turnout near the midpoint; turnouts every 400 feet if driveway >800 feet. A turnaround is required on all*	SDCFC Sec 503.2.1 Dimensions (page 20), Sec 503.2.5 Dead Ends (page 21)and Sec 503.2.8 Roadway Turnouts (page 22) SDCCFC Sec 503.2.1 Dimensions (page 24), Sec 503.2.5 Dead Ends (page 26)and Sec 503.2.8 Roadway Turnouts (page 27) Driveway vertical clearance only 13'6' (Sec 503.2.1(c)); allows vertical clearance to be reduced, with signage indicating amount of clearance Sec 503.2.5 has requirements for turnaround mechanisms on	

CCR Title 14 SRA Fire Safe Regulations	Local Ordinance	Meets or Exceeds
building sites with driveways over 300 feet in length, sited within 50 feet of building.	driveways over 150 feet but does not specify that it should be at or near the midpoint nor specify turnarounds every 400 feet on driveways 800 feet+.	
Sec. 1273.11 Gate Entrances *Gates shall be at least 2 feet wider than the width of the traffic lane. Minimum width of 14 feet unobstructed horizontal clearance and 15 feet vertical clearance. All gates shall be located 30 feet from the roadway shall provide unobstructed traffic access on the roadway. Security gates shall not be installed without approval. Where a one-way road provides access to a gated entrance, a 40 foot turning radius shall be used.*	SDCFC Sec 503.6 Security Gates (page 23) SDCCFC Sec 503.6 Security Gates (page 29)	
Sec. 1274.00 Intent *Roadways and buildings are to be clearly identified.*	SDCFC Sec 503.3 Marking (page 22) and Sec 505 Premises Identification (page 24) SDCCFC Sec 503.3 Marking (page 27) and Sec 505 Premises Identification (page 29)	
Sec. 1274.01 Size of Letters, Numbers and Symbols for Street and Road Signs *Size of letters and numbers on street signs to be minimum 4 inch height, 0.5 inch stroke, reflectorized and contrasting with background.*	SDCFC Sec 503.3 Marking (page 22) and Sec 505 Premises Identification (page 24) SDCCFC Sec 503.3 Marking (page 27) and Sec 505 Premises Identification (page 29) Public Works Design Standard 13	
Sec. 1274.02 Visibility and Legibility of Street and Road Signs *Street signs to visible in both directions for a minimum distance of 100 feet.*	SDCFC Sec 503.3 Marking (page 22) and Sec 505 Premises Identification (page 24) SDCCFC Sec 503.3 Marking (page 27) and Sec 505 Premises Identification (page 29) Public Works Design Standard 13	
Sec. 1274.03 Height of Street and Road Signs *Height of street signs to be uniform county wide.*	SDCFC Sec 503.3 Marking (page 22) SDCCFC Sec 503.3 Marking (page 27) Public Works Design Standard 13	
Sec. 1274.04 Names and Numbers on Street and Road Signs *Streets to be identified in a consistent countywide system. Signs to be mounted in a uniform manner.*	SDCFC Sec 503.3 Marking (page 22) SDCCFC Sec 503.3 Marking (page 27) Public Works Design Standard 13	

CCR Title 14 SRA Fire Safe Regulations	Local Ordinance	Meets or Exceeds
Sec. 1274.05 Intersecting Roads, Streets and Private Lanes *Street signs shall be at provided road intersections.*	SDCFC Sec 503.3 Marking (page 22) SDCCFC Sec 503.3 Marking (page 27) Public Works Design Standard 13	
Sec. 1274.06 Signs Identifying Traffic Access Limitations *Shall be placed at the intersection preceding the limitation, no more than 100 feet before the limitation*	SDCFC Sec 503.3 Marking (page 22) SDCCFC Sec 503.3 Marking (page 27) Public Works Design Standard 13 None of the provided code sections/standards address this	
Sec. 1274.07 Installation of Road, Street and Private Lane Signs *Street signs shall be installed prior to final acceptance by local jurisdiction for road improvements.*	SDCFC Sec 503.1 General (page 18) and Sec 503.3 Marking (page 22) SDCCFC Sec 503.1 General (page 22) Sec 503.3 Marking (page 27) Public Works Design Standard 13	
Sec. 1274.08 Addresses for Buildings *All buildings shall be addressed according to the jurisdiction's address system. Each dwelling unit shall be separately identified.*	SDCFC Sec 505 Premises Identification (page 24) SDCCFC Sec 505 Premises Identification (page 29)	
Sec. 1274.09 Size of Letters, Numbers and Symbols for Addresses *Letter and numbers for addresses must be minimum 4 inch high, 0.5 inch stroke and contrasting background. Address shall be visible from street.*	SDCFC Sec 505.1 Address Numbers (page 24) SDCCFC Sec 505.1 Address Numbers (page 30)	
Sec. 1274.10 Installation, Location and Visibility of Addresses *All buildings must be clearly identified.* *Shall have a permanently posted address placed at each driveway entrance, visible from both directions of travel along road.* *Address shall be posted during construction and maintain thereafter.* *Address signs along one-way road shall be visible from both intended direction of travel and opposite direction.* *Multiple addresses on a single driveway shall be*	SDCFC Sec 505.1 Address Numbers (page 24) and Sec 505.3 Easement Address Signs (page 25) SDCCFC Sec 505.1 Address Numbers (page 30) and Sec 505.3 Easement Address Signs (page 30)	

CCR Title 14 SRA Fire Safe Regulations	Local Ordinance	Meets or Exceeds
mounted on a single post. *Addresses for single commercial business shall be placed at the nearest intersection providing access to the site.*		
Sec. 1275.00 Intent *Emergency water for wildfire protection shall be available, accessible, and maintained.*	CFC Sec 507.1 Required Water Supply (Chapter 5 – page 90)	
Sec. 1275.01 Application *Emergency water systems shall be installed and made serviceable prior to and during the time of construction except for alternatives approved by the authority having jurisdiction.*	CFC Sec 3312.1 Water Supply for Fire Protection (Chapter 33 – page 345)	
Sec. 1275.10 General Standards *System must meet or exceed NFPA 1142 and California Fire Code fire flow requirements. Water may be provided in a mobile water tender or other containment structure. Nothing prohibits the combined storage of emergency wildfire and structural firefighting water supplies unless prohibited by local ordinance. Freeze protection when required.*	SDCFC Sec 507.2 Type of Water Supply (page 25), Sec 507.3 Fire Flow (page 27), and Sec 507.5.1 Required Installations (page 27) SDCCFC Sec 507.2 Type of Water Supply (page 31), Sec 507.3 Fire Flow (page 33), and Sec 507.5.1 Required Installations (page 33)	
Sec. 1275.15 Hydrant/Fire Valve *Hydrant shall be 18 inch above ground, 8 feet from vegetation, no closer than 4 feet nor farther than 12 feet from roadway, in a location were fire apparatus will not block the roadway.* *Hydrant servicing an a building shall be not less than 50 feet nor more than ½ mile by road from building it serves and be located at a turnaround along the driveway or road that intersects the driveway.* *Headed with a 2 ½ inch National Hose male thread with cap for pressure and gravity flow systems and 4 ½ inch draft system.* *Hydrant shall have wet or dry barrel and shall have*	CFC Sec 507.5.6 Physical Protection (Chapter 5 – page 91) SDCFC Sec 507.2.2 Water Tanks (page 26), Sec 507.5.1.1 Location of Fire Hydrants (page 28), and Sec 507.5.7 Fire Hydrant and Fire Valve Location (page 29) SDCCFC Sec 507.2.2 Water Tanks (page 31), Sec 507.5.1.1 Location of Fire Hydrants (page 34), and Sec 507.5.7 Fire Hydrant and Fire Valve Location (page 36) Sec 507.5.7 allows fire hydrants to be between 14 and 24 inches above grade, otherwise these sections meet or exceed the requirements of §1275.15	

CCR Title 14 SRA Fire Safe Regulations	Local Ordinance	Meets or Exceeds
suitable crash protection required by local jurisdiction.		
Sec. 1275.20 Signing of Water Sources *If located along a driveway: marked with a 3 inch reflectorized blue marker on the driveway address sign and mounted on a fire retardant post.* *If located on a street or road: 3 inch marker shall be mounted on a fire retardant post within 3 feet of hydrant, no less than 3 feet nor greater than 5 feet above the ground* *Or specified in the OSFM's Guidelines for Fire Hydrant Markings Along State Highways and Freeways, May 1988.*	SDCFC 507.5.7.1 Signing of Water Sources and Fire Department Connections (page 29) SDCCFC 507.5.7.1 Signing of Water Sources and Fire Department Connections (page 36) Use of the word "may" here – recommend changing to "shall" if fire code official always requires hydrants & connections to be identified	
Sec. 1276.00 Intent *Reduce the intensity of wildfire through fuel modification for safe emergency operations and civilian evacuation and to establish a point of attack or defense from a wildfire.*	SDCFC Sec 4907 Defensible Space (page 40) SDCCFC Sec 4907 Defensible Space (page 52)	
Sec. 1276.01 Setback for Structure Defensible Space *Parceled one acre or larger provide a minimum 30 foot setback.* *Parcels less than one acre, local jurisdiction shall provide same practical effect.*	SDCFC Sec 4907.1.1 General Fire Setbacks (page 40) and Sec 4907.1.2 Fire Setbacks Against Adjacent Protected Areas (41) SDCCFC Sec 4907.1.1 General Fire Setbacks (page 52) and Sec 4907.1.2 Fire Setbacks Against Adjacent Protected Areas (52)	
Sec. 1276.02 Disposal of Flammable Vegetation and Fuels *Disposal of flammable vegetation and fuel modification to be done prior to final building inspection.*	SDCFC Sec 3318.1 Fuel Modification Zone During Construction (page 37) and Sec 4907.3 Maintenance of Defensible Space (page 43) SDCCFC Sec 3318.1 Fuel Modification Zone During Construction (page 48) and Sec 4907.3 Maintenance of Defensible Space (page 56)	
Sec. 1276.03 Greenbelts *Subdivisions and other developments, which propose greenbelts as part of their plan, shall locate the greenbelts strategically.*	SDCFC Sec 4903 Fire Protection Plan (page 39-40) SDCCFC Sec 4903 Fire Protection Plan (page 51)	

CALIFORNIA BOARD OF FORESTRY AND FIRE PROTECTION

SRA FIRE SAFE REGULATIONS

As of January 1, 2016

California Code of Regulations
Title 14 Natural Resources
Division 1.5 Department of Forestry
Chapter 7 - Fire Protection
Subchapter 2 SRA Fire Safe Regulations
Article 1 | Article 2 | Article 3 | Article 4 | Article 5 | Index

ARTICLE 1. ADMINISTRATION

§ 1270.00. Title
§ 1270.01. Purpose
§ 1270.02. Scope
§ 1270.03. Local Ordinances
§ 1270.04. Provisions for Application of these Regulations
§ 1270.05. Inspection Authority
§ 1270.06. Inspections
§ 1270.07. Exceptions to Standards
§ 1270.08. Request for Exceptions
§ 1270.09. Appeals
§ 1271.00. Definitions
§ 1271.05. Distance Measurements
§ 1272.00. Maintenance of Defensible Space Measures

ARTICLE 2. EMERGENCY ACCESS AND EGRESS

§ 1273.00. Intent
§ 1273.01. Road Width
§ 1273.02. Roadway Surface
§ 1273.03. Roadway Grades
§ 1273.04. Roadway Radius
§ 1273.05. Roadway Turnarounds
§ 1273.06. Roadway Turnouts
§ 1273.07. Roadway Structures
§ 1273.08. One-Way Roads
§ 1273.09. Dead-End Roads
§ 1273.10. Driveways
§ 1273.11. Gate Entrances

ARTICLE 3. SIGNING AND BUILDING NUMBERING

§ 1274.00. Intent
§ 1274.01. Size of Letters, Numbers and Symbols for Street and Roads Signs
§ 1274.02. Visibility and Legibility of Street and Road Signs
§ 1274.03. Height of Street and Road Signs
§ 1274.04. Names and Numbers on Street and Road Signs
§ 1274.05. Intersecting Roads, Streets and Private Lanes
§ 1274.06. Signs Identifying Traffic Access Limitations
§ 1274.07. Installation of Road, Street and Private Lane Signs
§ 1274.08. Addresses for Buildings
§ 1274.09. Size of Letters, Numbers and Symbols for Addresses
§ 1274.10. Installation, Location and Visibility of Addresses

ARTICLE 4. EMERGENCY WATER STANDARDS

§ 1275.00. Intent
§ 1275.01. Application
§ 1275.10. General Standards
§ 1275.15. Hydrant/Fire Valve
§ 1275.20. Signing of Water Sources

ARTICLE 5. FUEL MODIFICATION STANDARDS

§ 1276.00. Intent
§ 1276.01. Setback for Structure Defensible Space
§ 1276.02. Disposal of Flammable Vegetation and Fuels
§ 1276.03. Greenbelts

Authority cited
NOTE: Authority cited: Section 4290, Public Resources Code. Reference: Sections 4290 and 4291, Public Resources Code.
History
1. New sections filed 5/30/91; operative 5/30/91 pursuant to Government Code section 11346.2(d) (Register 91, No.27)
2. Amendments filed 1-31-2013; operative 4-1-2013 (Register 2013, No. 5)
3. Amendments filed 4-27-2015; operative 1-1-2016 (Register 2015, No. 18)

ARTICLE 1. ADMINISTRATION

§ 1270.00. Title
§ 1270.01. Purpose
§ 1270.02. Scope
§ 1270.03. Local Ordinances
§ 1270.04. Provisions for Application of these Regulations
§ 1270.05. Inspection Authority
§ 1270.06. Inspections
§ 1270.07. Exceptions to Standards
§ 1270.08. Request for Exceptions
§ 1270.09. Appeals
§ 1271.00. Definitions
§ 1271.05. Distance Measurements
§ 1272.00. Maintenance of Defensible Space Measures

1270.00. Title

These regulations shall be known as “SRA Fire Safe Regulations,” and shall constitute the basic wildland fire protection standards of the California Board of Forestry.

1270.01. Purpose

These regulations have been prepared and adopted for the purpose of establishing minimum wildfire protection standards in conjunction with building, construction and development in SRA. A local jurisdiction may petition the Board for certification pursuant to section 1270.03. Where Board certification has not been granted, these regulations shall become effective September 1, 1991. The future design and construction of structures, subdivisions and developments in State Responsibility Area (SRA) shall provide for basic emergency access and perimeter wildfire protection measures as specified in the following articles. These measures shall provide for emergency access; signing and building numbering; private water supply reserves for emergency fire use; and vegetation modification. The fire protection standards which follow shall specify the minimums for such measures.

1270.02. Scope

(a) These regulations shall apply to:
(1) the perimeters and access to all residential, commercial, and industrial building construction within SRA approved after January 1, 1991 except as set forth below in subsection b.);
(2) all tentative and parcel maps or other developments approved after January 1, 1991; and
(3) applications for building permits on a parcel approved in a pre-1991 parcel or tentative map to the extent that conditions relating to the perimeters and access to the buildings were not imposed as part of the approval of the parcel or tentative map.

(b) These regulations do not apply where an application for a building permit is filed after January 1, 1991 for building construction on a parcel that was formed from a parcel map or tentative map (if the final map for the tentative map is approved within the time prescribed by the local ordinance) approved prior to January 1, 1991, to the extent that conditions relating to the perimeters and access to the buildings were imposed by the parcel map or final tentative map approved prior to January 1, 1991.

(c) Affected activities include, but are not limited to:

(1) permitting or approval of new parcels, excluding lot line adjustments as specified in Government Code (GC) section 66412(d),
(2) application for a building permit for new construction, not relating to an existing structure,
(3) application for a use permit,
(4) the siting of manufactured homes (manufactured homes are as defined by the National Fire Protection Association, National Fire Code, section 501A, Standard for Fire Safety Criteria for Manufactured Home Installations, Sites and Communities, chapter 1, section 1-2, Definitions, page 4, 1987 edition and Health and Safety Code sections 18007, 18008, and 19971).
(5) road construction, including construction of a road that does not currently exist, or extension of an existing road.

(d) EXEMPTION: Roads used solely for agricultural or mining use and roads used solely for the management and harvesting of wood products.

1270.03. Local Ordinances

Nothing contained in these regulations shall be considered as abrogating the provisions of any ordinance, rule or regulation of any state or local jurisdiction providing such ordinance, rule, regulation or general plan element is equal to or more stringent than these minimum standards. The Board may certify local ordinances as equaling or exceeding these regulations when they provide the same practical effect. The Board's certification of local ordinances pursuant to this section is rendered invalid when previously certified ordinances are subsequently amended by local jurisdictions without Board re-certification of the amended ordinances. The Board's regulations supersede the amended local ordinance(s) when the amended local ordinance(s) are not re-certified by the Board. Amendments made by local jurisdictions to previously certified ordinances shall be re-certified as described in 14 CCR §§ 1270.01 and 1270.03.

1270.04. Provisions for Application of these Regulations

This subchapter shall be applied as follows:

(a) local jurisdictions shall provide the Director with notice of applications for building permits, tentative parcel maps, tentative maps, and use permits for construction or development within SRA.

(b) the Director shall review and make fire protection recommendations on applicable construction or development or maps provided by the local jurisdiction.

(c) the local jurisdiction shall ensure that the applicable sections of this subchapter become a condition of approval of any applicable construction of development permit or map.

1270.05. Inspection Authority

(a) Inspection shall be made pursuant to section 1270.06 by:
(1) the Director, or
(2) local jurisdictions that have assumed state fire protection responsibility on SRA lands, or
(3) local jurisdictions where these regulations have been incorporated verbatim into that jurisdiction's building permit or subdivision approval process and the inspection duties have been formally delegated by CAL FIRE to the local jurisdiction, or
(4) local jurisdictions where the local ordinances have been certified pursuant to 14 CCR §§ 1270.01 and 1270.03 and the inspection duties have been formally delegated by CAL FIRE to the local jurisdiction.

(b) Nothing in this section abrogates CAL FIRE's authority to inspect and enforce state forest and fire laws even when the inspection duties have been delegated pursuant to this section.

(c) Reports of violations shall be provided to the CAL FIRE Unit headquarters that administers SRA fire protection in the local jurisdiction.

1270.06. Inspections

The inspection entity listed in 14 CCR 1270.05 may inspect for compliance with these regulations. When inspections are conducted, they should occur prior to: the issuance of the use permit; certificate of occupancy; the recordation of the parcel map or final map; the filing of a notice of completion; or the final inspection of any project or building permit.

1270.07. Exceptions to Standards

Upon request by the applicant, exceptions to standards within this subchapter or local jurisdiction certified ordinances may be allowed by the inspection entity listed in 14 CCR 1270.05, where the exceptions provide the same overall practical effect as these regulations towards providing defensible space. Exceptions granted by the inspection entity listed in 14 CCR 1270.05 shall be made on a case-by-case basis only. Exceptions granted by the inspection entity listed in 14 CCR 1270.05 shall be forwarded to the appropriate CAL FIRE Unit Office that administers SRA fire protection in that county and shall be retained on file at the Unit Office.

1270.08. Request for Exceptions

Requests for an exception shall be made in writing to the inspection entity listed in 14 CCR 1270.05 by the applicant or the applicant's authorized representative. The request shall state the specific section(s) for which an exception is requested, material facts supporting the contention of the applicant, the details of the exception proposed, and a map showing the proposed location and siting of the exception.

1270.09. Appeals

Where an exception is not granted by the inspection authority, the applicant may appeal such denial to the local jurisdiction. The local jurisdiction may establish or utilize an appeal process consistent with existing local building or planning department appeal processes.

Before the local jurisdiction makes a determination on an appeal, the inspection authority shall be consulted and shall provide to that local jurisdiction documentation outlining the effects of the requested exception on wildland fire protection.

If an appeal is granted, the local jurisdiction shall make findings that the decision meets the intent of providing defensible space consistent with these regulations. Such findings shall include a statement of reasons for the decision. A written copy of these findings shall be provided to the CAL FIRE Unit headquarters that administers SRA fire protection in that local jurisdiction.

1271.00. Definitions

Accessory building: Any building used as an accessory to residential, commercial, recreational, industrial, or educational purposes as defined in the California Building Code, 1989 Amendments, Chapter 11, Group M, Division 1 Occupancy that requires a building permit.

Agriculture: Land used for agricultural purposes as defined in a local jurisdiction's zoning ordinances.

Building: Any structure used or intended for supporting or sheltering any use of occupancy that is defined in the California Building Code, 1989 Amendments, Chapter 11, except Group M, Division 1 , Occupancy. For the purposes of this subchapter, building includes mobile homes and manufactured homes, churches, and day care facilities.

CDF: California Department of Forestry and Fire Protection.

Dead-end road: A road that has only one point of vehicular ingress/egress, including cul-de- sacs and looped roads.

Defensible space: The area within the perimeter of a parcel, development, neighborhood or community where basic wildland fire protection practices and measures are implemented, providing the key point of defense from an

approaching wildfire or defense against encroaching wildfires or escaping structure fires. The perimeter as used in this regulation is the area encompassing the parcel or parcels proposed for construction and/or development, excluding the physical structure itself. The area is characterized by the establishment and maintenance of emergency vehicle access, emergency water reserves, street names and building identification, and fuel modification measures.

Development: As defined in Section 66418.1 of the California Government Code.

Director: Director of the Department of Forestry and Fire Protection or his/her designee.

Driveway: A vehicular access that serves no more than two buildings, with no more than three dwelling units on a single parcel, and any number of accessory buildings.

Dwelling unit: Any building or portion thereof which contains living facilities, including provisions for sleeping, eating, cooking and/or sanitation for not more than one family.

Exception: An alternative to the specified standard requested by the applicant that may be necessary due to health, safety, environmental conditions, physical site limitations or other limiting conditions such as recorded historical sites, that provide mitigation of the problem.

Fire valve: See hydrant.

Fuel modification area: An area where the volume of flammable vegetation has been reduced, providing reduced fire intensity and duration.

Greenbelts: A facility or land-use, designed for a use other that fire protection, which will slow or resist the spread of a wildfire. Includes parking lots, irrigated or landscaped areas, golf courses, parks, playgrounds, maintained vineyards, orchards or annual crops that do not cure in the field.

Hammerhead/T: A roadway that provides a "T" shaped, three-point turnaround space for emergency equipment, being no narrower that the road that serves it.

Hydrant: A valved connection on a water supply/storage system, having at least one 2 1/2 inch outlet, with male American National Fire Hose Screw Threads (NH) used to supply fire apparatus and hoses with water.

Local Jurisdiction: Any county, city/county agency or department, or any locally authorized district that issues or approves building permits, use permits, tentative maps or tentative parcel maps, or has authority to regulate development and construction activity.

Occupancy: The purpose for which a building, or part thereof, is used or intended to be used.

One-way road: A minimum of one traffic lane width designed for traffic flow in one direction only.

Roads, streets, private lanes: Vehicular access to more than one parcel; access to any industrial or commercial occupancy; or vehicular access to a single parcel with more than two buildings or four or more dwelling units.

Roadway: Any surface designed, improved, or ordinarily used for vehicle travel.

Roadway structures: Bridges, culverts, and other appurtenant structures which supplement the roadway bed or shoulders.

Same Practical Effect: As used in this subchapter means an exception or alternative with the capability of applying accepted wildland fire suppression strategies and tactics, and provisions for fire fighter safety, including:
(a) access for emergency wildland fire equipment,
(b) safe civilian evacuation,
(c) signing that avoids delays in emergency equipment response,
(d) available and accessible water to effectively attack wildfire or defend a structure from wildfire, and
(e) fuel modification sufficient for civilian and fire fighter safety.

State Board of Forestry (SBOF): A nine member board, appointed by the Governor, which is responsible for developing the general forest policy of the state, for determining the guidance policies of the Department of Forestry and Fire Protection, and for representing the state's interest in federal land in California.

State Responsibility Area (SRA): As defined in the Public Resources Code section 4126-4127; and the California Code of Regulations, Title 14, Division 1.5, Chapter 7, Article 1, Sections 1220-1220.5.

Structure: That which is built or constructed, an edifice or building of any kind, or any piece of work artificially built up or composed of parts joined together in some definite manner.

Subdivision: As defined in Section 66424 of the Government Code.

Traffic lane: The portion of a roadway that provides a single line of vehicle travel.

Turnaround: A roadway, unobstructed by parking, which allows for a safe opposite change of direction for emergency equipment. Design of such area may be a hammerhead/T or terminus bulb.

Turnouts: A widening in a roadway to allow vehicles to pass.

Vertical clearance: The minimum specified height of a bridge or overhead projection above the roadway.

Wildfire: As defined in Public Resources Code Section 4103 and 4104.

1271.05. Distance Measurements

All specified or referenced distances are measured along the ground, unless otherwise stated.

1272.00. Maintenance of Defensible Space Measures

To ensure continued maintenance of properties in conformance with these standards and measures and to assure continue availability, access, and utilization of the defensible space provided for these standards during a wildfire, provisions for annual maintenance shall be included in the development plans and/or shall be provided as a condition of the permit, parcel or map approval.

ARTICLE 2. EMERGENCY ACCESS AND EGRESS

§ 1273.00. Intent
§ 1273.01. Road Width
§ 1273.02. Roadway Surface
§ 1273.03. Roadway Grades
§ 1273.04. Roadway Radius
§ 1273.05. Roadway Turnarounds
§ 1273.06. Roadway Turnouts
§ 1273.07. Roadway Structures
§ 1273.08. One-Way Roads
§ 1273.09. Dead-End Roads
§ 1273.10. Driveways
§ 1273.11. Gate Entrances

1273.00. Intent

Road and street networks, whether public or private, unless exempted under section 1270.02(e), shall provide for safe access for emergency wildland fire equipment and civilian evacuation concurrently, and shall provide unobstructed traffic circulation during a wildfire emergency consistent with Sections 1273.00 through 1273.11.

1273.01. Road Width

All roads shall be constructed to provide a minimum of two ten (10) foot traffic lanes, not including shoulder and

striping. These traffic lanes shall provide for two-way traffic flow to support emergency vehicle and civilian egress, unless other standards are provided in this article, or additional requirements are mandated by local jurisdictions or local subdivision requirements.

1273.02. Roadway Surface

Roadways shall be designed and maintained to support the imposed load of fire apparatus weighing at least 75,000 pounds and provide an aggregate base. Project proponent shall provide engineering specifications to support design, if requested by the local authority having jurisdiction.

1273.03. Roadway Grades

The grade for all roads, streets, private lanes and driveways shall not exceed 16 percent.

1273.04. Roadway Radius

(a) No roadway shall have a horizontal inside radius of curvature of less than 50 feet and additional surface width of 4 feet shall be added to curves of 50-100 feet radius; 2 feet to those from 100-200 feet.

(b) The length of vertical curves in roadways, exclusive of gutters, ditches, and drainage structures designed to hold or divert water, shall be not less than 100 feet.

1273.05. Roadway Turnarounds

Turnarounds are required on driveways and dead-end roads. The minimum turning radius for a turnaround shall be forty (40) feet, not including parking, in accordance with the following figure. If a hammerhead/T is used instead, the top of the “T” shall be a minimum of sixty (60) feet in length.

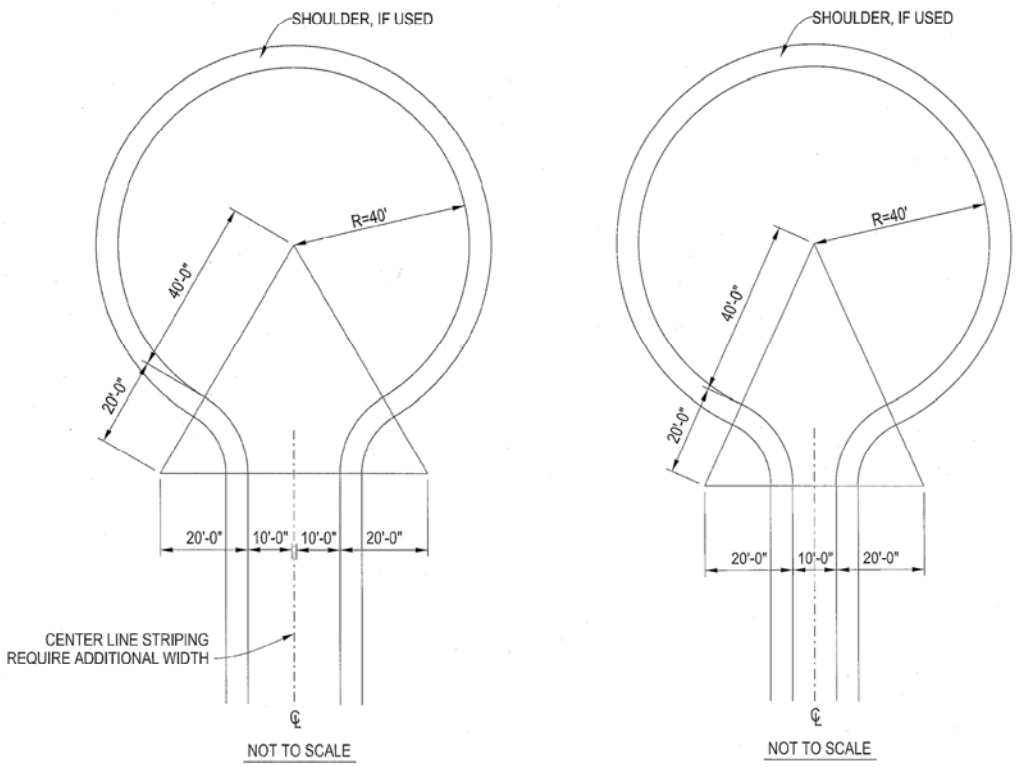

FIGURE FOR 14 CCR § 1273.05. TURNAROUND EXAMPLES

1273.06. Roadway Turnouts

Turnouts shall be a minimum of twelve (12) feet wide and thirty (30) feet long with a minimum twenty-five (25) foot taper on each end.

1273.07. Roadway Structures

(a) All driveway, road, street, and private lane roadway structures shall be constructed to carry at least the maximum load and provide the minimum vertical clearance as required by Vehicle Code Sections 35250, 35550, and 35750.

(b) Appropriate signing, including but not limited to weight or vertical clearance limitations, one-way road or single lane conditions, shall reflect the capability of each bridge.

(c) Where a bridge or an elevated surface is part of a fire apparatus access road, the bridge shall be constructed and maintained in accordance with the American Association of State and Highway Transportation Officials Standard Specifications for Highway Bridges, 17th Edition, published 2002 (known as AASHTO HB-17), hereby incorporated by reference. Bridges and elevated surfaces shall be designed for a live load sufficient to carry the imposed loads of fire apparatus. Vehicle load limits shall be posted at both entrances to bridges when required by the local authority having jurisdiction. Where elevated surfaces designed for emergency vehicle use are adjacent to surfaces which are not designed for such use, barriers, or signs, or both, as approved by the local authority having jurisdiction, shall be installed and maintained. A bridge with only one traffic lane may be authorized by the local jurisdiction; however, it shall provide for unobstructed visibility from one end to the other and turnouts at both ends.

1273.08. One-Way Roads

All one-way roads shall be constructed to provide a minimum, not including shoulders, of one twelve (12) foot traffic lane. The local jurisdiction may approve one-way roads. All one-way roads shall connect to a two-lane roadway at both ends, and shall provide access to an area currently zoned for no more than ten (10) dwelling units. In no case shall it exceed 2,640 feet in length. A turnout shall be placed and constructed at approximately the midpoint of each one-way road.

1273.09. Dead-End Roads

(a) The maximum length of a dead-end road, including all dead-end roads accessed from the dead-end road, shall not exceed the following cumulative lengths, regardless of the numbers of parcels served:
parcels zoned for less than one acre – 800 feet
parcels zoned for 1 acre to 4.99 acres – 1320 feet
parcels zoned for 5 acres to 19.99 acres – 2640 feet
parcels zoned for 20 acres or larger – 5280 feet

All lengths shall be measured from the edge of the roadway surface at the intersection that begins the road to the end of the road surface at the intersection that begins the road to the end of the road surface at its farthest point. Where a dead-end road crosses areas of differing zoned parcel sizes, requiring different length limits, the shortest allowable length shall apply.

(b) Where parcels are zoned 5 acres or larger, turnarounds shall be provided at a maximum of 1320 foot intervals.

(c) Each dead-end road shall have a turnaround constructed at its terminus.

1273.10. Driveways

(a) All driveways shall be constructed to provide a minimum of one (1) ten (10) foot traffic lane and fourteen (14) feet unobstructed horizontal clearance and unobstructed vertical clearance of fifteen (15) feet.

(b) Driveways exceeding 150 feet in length, but less than 800 feet in length, shall provide a turnout near the

midpoint of the driveway. Where the driveway exceeds 800 feet, turnouts shall be provided no more than 400 feet apart.

(c) A turnaround shall be provided to all building sites on driveways over 300 feet in length, and shall be within fifty (50) feet of the building.

1273.11. Gate Entrance

(a) Gate entrances shall be at least two (2) feet wider than the width of the traffic lane(s) serving that gate and a minimum width of fourteen (14) feet unobstructed horizontal clearance and unobstructed vertical clearance of fifteen (15) feet.

(b) All gates providing access from a road to a driveway shall be located at least thirty (30) feet from the roadway and shall open to allow a vehicle to stop without obstructing traffic on that road.

(c) Security gates shall not be installed without approval and where security gates are installed, they shall have an approved means of emergency operation. Approval shall be by the local authority having jurisdiction. The security gates and the emergency operation shall be maintained operational at all times.

(d) Where a one-way road with a single traffic lane provides access to a gated entrance, a forty (40) foot turning radius shall be used.

ARTICLE 3. SIGNING AND BUILDING NUMBERING

§ 1274.00. Intent
§ 1274.01. Size of Letters, Numbers and Symbols for Street and Roads Signs
§ 1274.02. Visibility and Legibility of Street and Road Signs
§ 1274.03. Height of Street and Road Signs
§ 1274.04. Names and Numbers on Street and Road Signs
§ 1274.05. Intersecting Roads, Streets and Private Lanes
§ 1274.06. Signs Identifying Traffic Access Limitations
§ 1274.07. Installation of Road, Street and Private Lane Signs
§ 1274.08. Addresses for Buildings
§ 1274.09. Size of Letters, Numbers and Symbols for Addresses
§ 1274.10. Installation, Location and Visibility of Addresses

1274.00. Intent

To facilitate locating a fire and to avoid delays in response, all newly constructed or approved roads, street, and buildings shall be designated by names or numbers, posted on signs clearly visible and legible from the roadway. This section shall not restrict the size of letters of numbers appearing on street signs for other purposes.

1274.01. Size of Letters, Numbers and Symbols for Street and Roads Signs

Size of letters, numbers, and symbols for street and road signs shall be a minimum 4 inch letter height, .5 inch stroke, reflectorized, contrasting with the background color of the sign.

1274.02. Visibility and Legibility of Street and Road Signs

Street and road signs shall be visible and legible from both directions of vehicle travel for a distance of at least 100 feet.

1274.03. Height of Street and Road Signs

Height of street and road signs shall be uniform county wide, and meet the visibility and legibility standards of this article.

1274.04. Names and Numbers on Street and Road Signs

Newly constructed or approved public and private roads and streets must be identified by a name or number through a consistent countywide system that provides for sequenced or patterned numbering and/or non-duplicating naming within each county. All signs shall be mounted and oriented in a uniform manner. This section does not require any entity to rename or renumber existing roads or streets, nor shall a roadway providing access only to a single commercial or industrial occupancy require naming or numbering.

1274.05. Intersecting Roads, Streets and Private Lanes

Signs required by this article identifying intersecting roads, streets and private lanes shall be placed at the intersection of those roads, streets, and/or private lanes.

1274.06. Signs Identifying Traffic Access Limitations

A sign identifying traffic access or flow limitations, including but not limited to weight or vertical clearance limitations, dead-end road, one-way road or single lane conditions, shall be placed:

(a) at the intersection preceding the traffic access limitation, and

(b) no more than 100 feet before such traffic access limitation.

1274.07. Installation of Road, Street and Private Lane Signs

Road, street and private lane signs required by this article shall be installed prior to final acceptance by the local jurisdiction of road improvements.

1274.08. Addresses for Buildings

All buildings shall be issued an address by the local jurisdiction which conforms to that jurisdiction's overall address system. Accessory buildings will not be required to have a separate address; however, each dwelling unit within a building shall be separately identified.

1274.09. Size of Letters, Numbers and Symbols for Addresses

Size of letters, numbers and symbols for addresses shall be a minimum 4 inch letter height, .5 inch stroke, reflectorized, contrasting with the background color of the sign.

Address identification shall be plainly legible and visible from the street or road fronting the property. Addresses shall be Arabic numbers or alphabetical letters. Where access is by means of a private road and the address identification cannot be viewed from the public way, a monument, pole or other sign or means shall be used to identify the address.

1274.10. Installation, Location and Visibility of Addresses

(a) All buildings shall have a permanently posted address, which shall be placed at each driveway entrance and visible from both directions of travel along the road. In all cases, the address shall be posted at the beginning of construction and shall be maintained thereafter, and the address shall be visible and legible from the road on which the address is located.

(b) Address signs along one-way roads shall be visible from both the intended direction of travel and the opposite direction.

(c) Where multiple addresses are required at a single driveway, they shall be mounted on a single post.

(d) Where a roadway provides access solely to a single commercial or industrial business, the address sign shall be placed at the nearest road intersection providing access to that site.

ARTICLE 4. EMERGENCY WATER STANDARDS

§ 1275.00. Intent
§ 1275.01. Application
§ 1275.10. General Standards
§ 1275.15. Hydrant/Fire Valve
§ 1275.20 Signing of Water Sources

1275.00. Intent

Emergency water for wildfire protection shall be available, accessible, and maintained in quantities and locations specified in the statute and these regulations, in order to attack a wildfire or defend property from a wildfire.

1275.01. Application

The provisions of this article shall apply in the tentative and parcel map process when new parcels are approved by the local jurisdiction having authority. When a water supply for structure defense is required to be installed, such protection shall be installed and made serviceable prior to and during the time of construction except when alternative methods of protection are provided and approved by the local authority having jurisdiction.

1275.10. General Standards

Water systems that comply with the below standard or standards meet or exceed the intent of these regulations. Water systems equaling or exceeding the National Fire Protection Association (NFPA) 1142, "Standard on Water Supplies for Suburban and Rural Fire Fighting," 2012 Edition, hereby incorporated by reference, and California Fire Code, California Code of Regulations title 24, part 9, shall be accepted as meeting the requirements of this article. Such emergency water may be provided in a fire agency mobile water tender, or naturally occurring or man made containment structure, as long as the specified quantity is immediately available. Nothing in this article prohibits the combined storage of emergency wildfire and structural firefighting water supplies unless so prohibited by local ordinance or specified by the local fire agency. Where freeze protection is required by local jurisdictions having authority, such protection measures shall be provided.

1275.15. Hydrant/Fire Valve

(a) The hydrant or fire valve shall be eighteen (18) inches above grade, eight (8) feet from flammable vegetation, no closer than four (4) feet nor farther than twelve (12) feet from a roadway, and in a location were fire apparatus using it will not block the roadway.
The hydrant serving any building shall:

(1) be not less than fifty (50) feet nor more than 1/2 mile by road from the building it is to serve, and
(2) be located at a turnout or turnaround, along the driveway to that building or along the road that intersects with that driveway.

(b) The hydrant head shall be 2 1/2 inch National Hose male thread with cap for pressure and gravity flow systems and 4 1/2 inch draft systems. Such hydrants shall be wet or dry barrel as required by the delivery system. They shall have suitable crash protection as required by the local jurisdiction.

1275.20 Signing of Water Sources

Each hydrant/fire valve or access to water shall be identified as follows:
(a) If located along a driveway, a reflectorized blue marker, with a minimum dimension of 3 inches shall be located on the driveway address sign and mounted on a fire retardant post, or

(b) If located along a street or road,

(1) a reflectorized blue marker, with a minimum dimension of 3 inches, shall be mounted on a fire retardant post. The sign post shall be within 3 feet of said hydrant/fire valve, with the sign no less than 3 feet nor greater than 5 feet above ground, in a horizontal position and visible from the driveway, or
(2) as specified in the State Fire Marshal's Guidelines for Fire Hydrant Markings Along State Highways and Freeways, May 1988.

ARTICLE 5. FUEL MODIFICATION STANDARDS

§ 1276.00. Intent
§ 1276.01. Setback for Structure Defensible Space
§ 1276.02. Disposal of Flammable Vegetation and Fuels
§ 1276.03. Greenbelts

1276.00 Intent

To reduce the intensity of a wildfire by reducing the volume and density of flammable vegetation, the strategic siting of fuel modification and greenbelt shall provide

(1) increased safety for emergency fire equipment and evacuating civilians by its utilization around structures and roads, including driveways; and

(2) a point of attack or defense from a wildfire.

1276.01 Setback for Structure Defensible Space

(a) All parcels 1 acre and larger shall provide a minimum 30 foot setback for buildings and accessory buildings from all property lines and/or the center of the road.

(b) For parcels less than 1 acre, the local jurisdiction shall provide for the same practical effect.

1276.02 Disposal of Flammable Vegetation and Fuels

Disposal, including chipping, burying, burning or removal to a landfill site approved by the local jurisdiction, of flammable vegetation and fuels caused by site development and construction, road and driveway construction, and fuel modification shall be completed prior to completion of road construction or final inspection of a building permit.

1276.03 Greenbelts

Subdivision and other developments, which propose greenbelts as a part of the development plan, shall locate said greenbelts strategically, as a separation between wildland fuels and structures. The locations shall be approved by the local authority having jurisdiction and may be consistent with the CAL FIRE Unit Fire Management Plan or Contract County Fire Plan.

AN ORDINANCE REPEALING AND REENACTING THE
SAN DIEGO COUNTY FIRE CODE
AND AMENDING RELATED REGULATORY CODE SECTIONS

The Board of Supervisors of the County of San Diego ordains as follows:

Section 1. Chapter 1 of Division 6 of Title 9 of the County of San Diego Code of Regulatory Ordinances is hereby repealed and reenacted to read as follows:

TITLE 9

CONSTRUCTION CODES AND FIRE CODE

DIVISION 6

FIRE PROTECTION

CHAPTER 1

COUNTY FIRE CODE

SEC. 96.1.001. ADOPTION OF COUNTY AMENDMENTS TO THE CALIFORNIA FIRE CODE.

Every three years the State of California repeals, revises and republishes the California Building Standards Code ("CBSC") in its entirety and in doing so adopts and publishes amendments to the included California Fire Code (California Code of Regulations, Title 24, Part 9). Pursuant to California Health & Safety Code section17958, the CBSC and its California Fire Code become effective in the County of San Diego 180 days after publication. California Health and Safety Code sections 17922, 17958, 17958.5 and 17958.7 provide that the County may adopt the California Fire Code by reference as the County's own fire code and make such changes or modifications that the Board of Supervisors expressly finds are reasonably necessary because of local climatic, geological or topographical conditions. In this chapter, the County adopts modifications and changes to the Fire Code portion of the CBSC that are reasonably necessary because of the County's climatic, geological and topographical conditions.

The County adopts as the County Fire Code, for the unincorporated area of the County, the following: (1) The 2013 California Fire Code portion of the CBSC, including the appendix to Chapter 4 and appendices B, H, I, & K; (2) the 2012 International Fire

Code (IFC) and the National Fire Protection Association Standards 13, 13-R & 13-D, 2013 Editions; and (3) the County's amendments in this chapter.

To determine which of these codes governs in any particular case, code amendments adopted by the State of California shall take precedence over the 2012 IFC, and the 2012 IFC shall be used for those code sections not adopted by the State. Amendments the County adopts shall take precedence over both the 2012 IFC and 2013 California Fire Code provisions. Where this Chapter states that a provision of the California Fire Code is revised, amended, changed, deleted, added or otherwise modified, that means revised, amended, changed, deleted, added or otherwise modified as it is incorporated into this Chapter.

This County Fire Code is adopted for the protection of the public health and safety and applies to both ministerial and discretionary projects. It includes definitions, requirements for permits and inspection for installing or altering systems, regulations for the erection, construction, enlargement, alteration, repair, moving, removal, conversion, demolition, equipment use and maintenance of buildings, structures and premises, including the installation, alteration or repair of new and existing fire protection systems and their inspection and provides penalties for violation of this code. It shall apply to all new construction and to any alterations, repairs, or reconstruction, except as otherwise provided for in this chapter.

Nothing in this chapter shall interfere with or impede the authority of the final decision maker authorized to approve, conditionally approve or deny discretionary projects.

SEC. 96.1.002. CALIFORNIA FIRE CODE.

The "California Fire Code" means the 2013 Fire Code portion of the CBSC, including the appendix to Chapter 4 and appendices B, F, H & K and the IFC (2012 edition).

SEC. 96.1.003. COUNTY FIRE CODE.

References to "this chapter" shall mean the County Fire Code. References to a section number not proceeded by the prefix "96.1," which stands for the title, division and chapter respectively of a section in this chapter, shall refer to the California Fire Code.

SEC. 96.1.004. RESPONSIBILITY FOR ENFORCEMENT.

(a) The County Fire Warden or authorized representative shall be responsible for ensuring County enforcement of Chapter 56 of the California Fire Code as adopted by and incorporated in the County Fire Code insofar as it pertains to fireworks and pyrotechnics and California Code of Regulations, Title 19, Division 1, Chapter 6. The

Sheriff shall be responsible for enforcement of Chapter 56 of the California Fire Code as adopted and incorporated in the County Fire Code insofar as it pertains to explosives and California Code of Regulations, Title 19, Division 1, Chapter 10.

(b) All other portions of the County Fire Code shall be enforced as follows:

(1) By the Fire Warden or his/her duly authorized representative of the San Diego County Fire Authority in all unincorporated areas of the County which are outside a fire protection district.

(2) For areas in a fire protection district, by the district fire chief or his/her duly authorized representative.

SEC. 96.1.005. GEOGRAPHIC LIMITS.

The geographic limits referred to in certain sections of the 2013 California Fire Code are established as follows:

(a) **Sec. 5704.2.9.6.1.** The geographic limits in which the storage of Class I and Class II liquids in above-ground tanks outside of buildings is prohibited: the unincorporated area of the County of San Diego outside of a fire protection district.

Exceptions:

1. In areas zoned for mixed, general or high impact industrial uses.

2. Crankcase draining may be stored in specially constructed above-ground storage tanks, approved by the fire code official, with a maximum capacity of 550 gallons. These tanks may be located within a building when the fire code official deems appropriate and the container meets U.L. Standard 2085. Containers shall be installed and used in accordance with their listing and provisions shall be made for leak and spill containment. In no case shall storage be allowed on residential or institutional property.

3. With the fire code official's approval, Class I and II liquids may be stored above ground outside of buildings in specially designed, approved and listed containers which have features incorporated into their design which mitigate concerns for exposure to heat, ignition sources and mechanical damage. Containers shall be installed and used in accordance with their listing, and provisions shall be made for leak and spill containment. The fire code official may disapprove the installation of these containers when in his or her opinion their use presents a risk to life or property.

(b) **Sec. 5706.2.4.4**. The geographic limits in which the storage of Class I and Class II liquids in above-ground tanks is prohibited: the unincorporated area of the County of San Diego outside of a fire protection district.

Exceptions:

1. In areas zoned for other than residential uses, when approved by the Fire Authority having jurisdiction (FAHJ).

2. Crankcase draining may be stored in specially constructed above-ground storage tanks, approved by the fire code official, with a maximum capacity of 550 gallons. These tanks may be located within a building when the fire code official deems appropriate and the container meets U.L. Standard 2085. Containers shall be installed and used in accordance with their listing, and provisions shall be made for leak and spill containment. In no case shall storage be allowed in residential or institutional property.

3. With the fire code official's approval, Class I and II liquids may be stored above ground in specially designed, approved and listed containers which meet U.L. Standard 2085. Containers shall be installed and used in accordance with their listing, and provisions shall be made for leak and spill containment. The fire code official may disapprove the installation of such containers when in his opinion their use presents a risk to life or property.

(c) **Sec. 5806.2.** The geographic limits in which the storage of flammable cryogenic fluids in stationary containers is prohibited: the unincorporated area of the County of San Diego outside of a fire protection district, except for areas zoned for mixed, general or high impact industrial uses.

(d) **Sec. 6104.2.** The geographic limits in which the bulk storage of liquefied petroleum gas is prohibited for the protection of heavily populated and congested areas: the unincorporated areas outside of a fire protection district in the County of San Diego, except for areas zoned for mixed, general or high impact industrial uses.

Exception: Bulk tanks with a maximum aggregate capacity of 30,000 gallons water capacity for above-ground storage of underground distribution to residential areas, where the storage and distribution meets County Fire Code requirements as determined by the FAHJ.

SEC. 96.1.006. DELETIONS, REVISIONS, ADDITIONS AND NUMERICAL EXPLANATION.

When deletions, revisions and additions are made in this chapter to the California Fire Code, the digits following the first three digits of the section numbers in this chapter refer

to conform to the numbering system of the California Fire Code: e.g., SEC. 96.1.307.5 refers to Chapter 3 section 307.5 of the California Fire Code. When deletions, revisions and additions are made to an appendix of the California Fire Code, "APP" is added to the number: e.g., section SEC. 96.1.APP.B103.3 refers to Appendix Chapter B, section 103.3 of the California Fire Code.

SEC. 96.1.101.5. VALIDITY.

Section 101.5 of the California Fire Code is revised to read:

Sec. 101.5 Validity. The Board of Supervisors declares that should any section, paragraph, sentence or word of this chapter be declared invalid for any reason it is the intent of this Board that it would have passed all other portions of this chapter independently of any portion that may be declared invalid.

SEC. 96.1.102.13. REPEAL OF CONFLICTING ORDINANCES, RESOLUTIONS OR MOTIONS.

Section 102.13 is added to the California Fire Code to read:

Sec. 102.13 Repeal of conflicting ordinances, resolutions or motions. All former ordinances, resolutions or motions or parts thereof, conflicting or inconsistent with the provisions of this chapter are repealed.

SEC. 96.1.104.1. GENERAL AUTHORITY AND RESPONSIBILITIES

Section 104.1 of the California Fire Code is revised to read:

Sec. 104.1 General authority and responsibilities. The fire code official is hereby authorized to enforce the provisions of this code and shall have the authority to render interpretations of this code, and to adopt policies, procedures, rules and regulations in order to clarify the application of its provisions. Such interpretations, policies, procedures, rules and regulations shall be in compliance with the intent and purpose of this code and shall not have the effect of waiving requirements specifically provided for in this code. The fire code official may consult with other fire professionals and experts in the interpretation and application of this code.

SEC. 96.1.104.8. MODIFICATIONS.

Section 104.8 of the California Fire Code is revised to read:

Sec. 104.8 Modifications. Whenever there are practical difficulties involved in carrying out the provisions of this code, the fire code official shall have the authority to

grant modifications for individual cases, provided the fire code official shall first find that special individual reasons make the strict letter of this code impracticable and the modification is in compliance with the intent and purpose of this code and that such modification does not lessen health, life and fire safety requirements. The applicant's request for a modification shall state the specific sections(s) for which a modification is requested, material facts supporting the contention of the applicant, the details of the modification or mitigating measure proposed and, if applicable, a map showing the proposed location and siting of the modification or mitigation measure. The details of action granting modifications shall be recorded and entered into the files of the department of fire prevention.

SEC. 96.1.104.12. COST RECOVERY.

Section 104.12 is added to the California Fire Code to read:

Sec. 104.12 Cost recovery. The purpose of this section is to establish authority to obtain reimbursement from responsible individuals for the expenses of any emergency response and/or enforcement action by the fire department to protect the public from criminal or negligible activities, and from fire or hazardous substances.

Sec. 104.12.1 Reimbursement required. In accordance with the Health and Safety Code section 13000 et seq., an individual who acts negligently or in violation of the law and thereby requires the jurisdiction to provide an emergency response to a danger posed by a fire or hazardous substance shall be liable for reimbursement to the agency for the costs incurred. In accordance with Government Code sections 53150 through 53158, any individual who is under the influence of an alcoholic beverage or any drug or the combined influence of an alcoholic beverage or any drug, and whose negligent operation of a motor vehicle, boat or vessel or civil aircraft caused by that influence proximately causes any incident and thereby requires the agency to provide an emergency response shall reimburse the agency for the cost incurred.

SEC. 96.1.105.3.9. EXPENSE RECOVERY.

Section 105.3.9 is added to the California Fire Code to read:

Sec. 105.3.9 Expense recovery. The fire code official may impose a fee for recovery of expenses incurred to enforce the fire prevention provisions of this code.

SEC. 96.1.105.6.5.1. CHRISTMAS TREE LOTS.

Section 105.6.5.1 is added to the California Fire Code to read:

Sec. 105.6.5.1 Christmas tree lots. An operational permit is required to operate a Christmas tree lot, with or without flame proofing services.

SEC. 96.1.105.6.19.1. GREENWASTE RECYCLING, MULCHING, COMPOSTING OPERATIONS AND STORAGE.

Section 105.6.19.1 is added to the California Fire Code to read:

Sec. 105.6.19.1 Greenwaste recycling, mulching, composting operations and storage. An operational permit is required for greenwaste recycling, mulching, composting operations and storage.

SEC. 96.1.105.8. NEW MATERIALS, PROCESSES OR OCCUPANCIES WHICH REQUIRE PERMITS.

Section 105.8 is added to the California Fire Code to read:

Sec. 105.8 New materials, processes or occupancies which require permits. The fire code official may determine, after allowing affected persons an opportunity to be heard, that a material, process or occupancy, not listed in this code shall require a permit, in addition to those now enumerated in this code. In that case, the fire code official shall prepare a list of any additional material, process or occupancy that shall require a permit and post the list in a conspicuous place in the offices of the San Diego County Fire Authority. Any interested person may obtain a copy of the list.

SEC. 96.1.108. APPEALS.

Section 108 of the California Fire Code is revised to read:

Sec. 108.1 Regional Fire Appeals Board established. In order to hear and decide appeals of orders, decisions or determinations made by the fire code official relative to the application and interpretation of this code, including the granting or denial of modifications, there shall be and is hereby created the Regional Fire Appeals Board (Appeals Board). The Appeals Board shall adopt rules of procedure for conducting its business, and shall render all decisions and findings in writing to the appellant with a duplicate copy to the fire code official. A copy shall also be sent to the Building Official or other decision maker for the project, whichever is appropriate.

Sec. 108.2 Limitations on authority. An application for appeal shall be based on a claim that the intent of this code or the rules legally adopted hereunder have been incorrectly interpreted, the provisions of this code do not fully apply, or an equivalent method of protection or safety is proposed. The Appeals Board shall have no authority to waive requirements of this code.

Sec. 108.3 Qualifications. The Appeals Board shall consist of members who are qualified by experience and training to pass on matters pertaining to hazards of fire, explosions, hazardous conditions or fire protection systems and are not employees of the jurisdiction.

Sec. 108.4 Appeals procedures. This section establishes appeal procedures of an order, decision or determination (collectively, "determination") made by the fire code official, including the granting or denial of appeals.

Sec. 108.4.1 Appeals of determinations regarding building permits. The County, fire agency or project applicant may appeal a determination made by the fire code official related to a project for which a building permit is required by filing an appeal in writing with the Appeals Board within 30 days of the fire code official's final determination. The Appeals Board shall make factual findings and issue a written recommendation to the County Building Official on whether the fire code official's determination should be upheld, overruled or modified. The Building Official may not waive the requirements of this code, except as authorized by the code and is subject to the same requirements and restrictions in the code that applied to the fire code official. A copy of the recommendation shall be provided to the applicant. The County Building Official shall act on the Appeals Board's recommendation and issue a written decision to the parties within 15 days of receipt of the Appeals Board's recommendation. The Building Official's decision shall be final.

Sec. 108.4.2 Appeals of determinations regarding discretionary permits. The County, the fire agency or the project applicant may seek review of the fire code official's determination by the Appeals Board by filing a request for review with the Appeals Board within 30 days of the fire code official's determination. When reviewing a fire code official's determination pursuant to this subsection, the Appeals Board shall act in an advisory capacity. The Appeals Board shall review the fire code official's determination and make a recommendation to uphold, overrule or modify the fire code official's determination. The Appeals Board shall render its recommendation to the County decision maker or decision-making body for consideration with the application for the discretionary permit.

Sec. 108.4.3 Appeals of determinations for matters other than building permits or discretionary permits.

(a) **Areas outside a fire protection district.** Any affected party may appeal a determination made by the fire code official regarding a matter for which a building permit or discretionary permit is not required by filing an appeal in writing with the Appeals Board within 30 days of the fire code official's final determination. The Appeals Board shall review the fire code official's determination and make a recommendation to uphold, overrule or modify the

fire code official's determination. The Appeals Board's determination shall be final.

(b) **Areas inside a fire protection district.** Any affected party may appeal a determination made by the fire code official regarding a matter for which a building permit or discretionary permit is not required by filing an appeal in writing with the fire protection district's Board of Directors within 30 days of the fire code official's final determination. The Board of Directors shall review the fire code official's determination and make a recommendation to uphold, overrule or modify the fire code official's determination. The Board of Director's determination shall be final.

Sec. 108.5 Regional Fire Appeals Board.

(a) The Appeals Board members shall consist of the following:

- Two representatives from the San Diego County Fire Districts Association.
- Two chief officers from CAL FIRE.
- One fire marshal from the unincorporated area of the County.

(b) The Appeals Board shall not include a representative from the agency whose fire code official made the determination that is being appealed. An alternate for the regular member(s) of the Appeals Board shall be designated to serve in this situation.

(c) Three members shall constitute a quorum for the transaction of business, and three affirmative votes shall be necessary to render a recommendation.

(d) If the Appeals Board recommends a modification to this code for an individual case, a copy of the recommendation and findings along with a map showing the proposed modification and mitigating measures shall be forwarded to the Unit Chief of CAL FIRE, San Diego/Imperial Unit.

SEC. 96.1.109.4 VIOLATIONS, PENALTIES AND RESPONSIBILITY FOR COMPLIANCE.

Section 109.4 of the California Fire Code is revised to read:

Sec. 109.4 Violations, penalties and responsibility for compliance. It shall be unlawful for any person, as defined in section 12.115 of the County Code of Regulatory Ordinances, to use any property or erect, construct, enlarge, alter, repair, move, remove, improve, convert, demolish, equip, use, occupy or maintain any building or structure, or vacant land or cause the same to be done, contrary to or in violation of any of the

provisions of this chapter. A property owner shall be considered to have allowed any use or improvement of property occupied by or under the dominion and control of the owner and shall be responsible for the discontinuance and removal of any violation of the County Fire Code. This responsibility shall include property leased to another person. A property owner shall also be responsible for the discontinuance and removal of any violation of the County Fire Code that existed on the property prior to the current owner's purchase of the property.

SEC. 96.1.202. DEFINITIONS.

Section 202 of the California Fire Code is revised by adding or modifying the following definitions:

AERATED STATIC PILE. A composting process that uses an air distribution system to blow or draw air through the pile. Little or no pile agitation or turning is performed.

BLASTER. A person who has been approved by the Sheriff to conduct blasting operations and who has been placed on the list of approved blasters. The listing shall be valid for one year unless revoked by the Sheriff.

BLASTING AGENT. A material or mixture consisting of a fuel and oxidizer intended for blasting. The finished product as mixed and packaged for use or shipment shall not be detonated by means of a No. 8 test blasting cap when unconfined.

BLASTING OPERATION. The uses of an explosive device or explosive material to destroy, modify, obliterate or remove any obstruction of any kind.

BLASTING PERMIT. A permit issued by the Issuing Officer pursuant to section 105.6.14. The permit shall apply to a specific site and shall be valid for a period not to exceed one year.

BLAST SITE. The geographically defined area, as shown on a project map or plot plan, where a blaster is authorized by a blasting permit issued under this section to conduct a blasting operation.

CHIPPING AND GRINDING. An activity that mechanically reduces the size of organic matter.

COMPOSTING OPERATION. An operation that is conducted for the purpose of producing compost. The operation shall be by one or more of the following processes used to produce a compost product: static pile, windrow pile or aerated static pile.

DEAD-END ROAD. A road that has only one point of vehicular ingress/egress, including cul-de-sacs and looped roads.

DISTANCE MEASUREMENT. All specified or referenced distances are measured along the ground, unless otherwise stated.

EXPLOSIVES PERMIT. A permit to possess or use explosives, issued by the Issuing Officer, pursuant to California Health and Safety Code sections 12000 et seq. and Chapter 56 of this code. An explosives permit shall be valid for a period not to exceed one year, as provided in the permit conditions.

FIRE APPARATUS ACCESS ROAD. A road that provides fire apparatus access from a fire station to a facility, building or portion thereof. This is a general term that includes, but is not limited to a fire lane, public street, private street, driveway, parking lot lane and access roadway.

FIRE AUTHORITY HAVING JURISDICTION (FAHJ). The designated entity providing enforcement of fire regulations as they relate to planning, construction and development. The FAHJ may also provide fire suppression and other emergency services.

FIRE CHIEF. The fire chief is one of the following:

(a) The person appointed by the Board of Supervisors to serve as fire chief in the unincorporated areas not within a fire protection district.

(b) The chief officer of a fire protection district.

(c) The Fire Warden or her or his delegated representative when enforcing section 96.1.5608.1 of this Chapter.

FIRE CODE OFFICIAL. The Fire Warden or her or his delegated representative, the fire chief or a duly authorized representative, or other person as may be designated by law, appointment or delegation and charged with the administration and enforcement of this Chapter.

FIRE DEPARTMENT. Any regularly organized fire department, fire protection district, fire company, or legally formed volunteer fire department registered with the County of San Diego regularly charged with the responsibility of providing fire protection to a jurisdiction.

FIRE HAZARD. Any condition or conduct which: (a) increases or may increase the threat of fire to a greater degree than customarily recognized as normal by persons in the

public service regularly engaged in preventing, suppressing or extinguishing fire or (b) may obstruct, delay, hinder or interfere with the operations of the fire department or the egress of occupants in the event of fire.

FIRE PROTECTION DISTRICT. Any fire protection district created under State law and any water district providing fire protection services.

FUEL MODIFICATION ZONE. A strip of land where combustible vegetation has been thinned or modified or both and partially or totally replaced with approved fire-resistant and/or irrigated plants to provide an acceptable level of risk from vegetation fires. Fuel modification reduces the radiant and convective heat on a structure and provides valuable defensible space for firefighters to make an effective stand against an approaching fire front.

GREENWASTE. Organic material that includes, but is not limited to, yard trimmings, plant waste, manure, untreated wood wastes, paper products and natural fiber products.

HAZARDOUS FIRE AREA. Any geographic area mapped by the State or designated by a local jurisdiction as a moderate, high or very high fire hazard area or which the FAHJ has determined is a hazardous fire area, because the type and condition of vegetation, topography, weather and structure density increase the probability that the area will be susceptible to a wildfire.

HOGGED MATERIALS. Mill waste consisting mainly of hogged bark but may include a mixture of bark, chips, dust or other by-product from trees and vegetation.

INSPECTOR. For the purposes of sections 96.1, 5601.2, an inspector is a person on the Issuing Officer's approved list of inspectors authorized to conduct inspections, before and after a blast. To be on the Issuing Officer's approved list, an inspector shall have a blasting license issued by Cal/OSHA.

MAJOR BLASTING. A blasting operation that does not meet the criteria for minor blasting.

MID-RISE BUILDING. A building four stories or more high, but not exceeding 75 feet in height and not defined as a high-rise building by section 202 of the California Building Code. Measurements shall be made from the underside of the roof or floor above the topmost space that may be occupied to the lowest fire apparatus access road level.

MINOR BLASTING. A blasting operation that meets all of the following criteria: quantity of rock to be blasted does not exceed 100 cubic yards per shot, bore hole diameter does not exceed 2 inches, hole depth does not exceed 12 feet, maximum charge weight does not exceed 8 pounds of explosives per delay and the initiation of each charge

will be separated by at least 8 milliseconds. The maximum charge weight shall not exceed the Scaled Distance as shown below:

Distance from Blast Site (In Feet)	Scale-Distance Factor
0 - 300	Mandatory Seismic Monitoring
301 - 5,000	55
5,000+	65

MULCHING. The process by which mixed greenwaste is mechanically reduced in size for the purpose of making compost.

RESPONSE TIME. The elapsed time from the fire department's receipt of the first alarm to when the first fire unit arrives at the scene.

STATIC PILE. A composting process that is similar to the aerated static pile except that the air source may or may not be controlled.

STRUCTURE. That which is built or constructed, an edifice or building of any kind, or any piece of work artificially built up or composed of parts joined together in some manner.

TRAVEL TIME. The estimated time it would take for a responding agency to travel from the fire station to the furthest structure in a proposed development project, determined by measuring the safest, most direct, appropriate and reliable route with consideration given to safe operating speeds for heavy fire apparatus.

WINDROW COMPOSTING PROCESS. The process in which compostable material is placed in elongated piles. The piles or windrows are aerated and/or mechanically turned on a periodic basis.

WOOD CHIPS. Chips of various species of wood produced or used in chipping and grinding operations.

SEC. 96.1.304.1.4. OUTDOOR CARNIVALS AND FAIRS.

Section 304.1.4 is added to the California Fire Code to read:

Sec. 304.1.4 Outdoor carnivals and fairs. Outdoor carnivals and fairs shall only be conducted on grounds free of combustible vegetation or trimmed to the satisfaction of the FAHJ.

SEC. 96.1.305.5. ROCKETS, MODEL AIRCRAFT AND SIMILAR DEVICES.

Section 305.5 is added to the California Fire Code to read:

Sec. 305.5 Rockets, model aircraft and similar devices. Rockets, model airplanes, gliders, balloons, sky lanterns, floating luminary or similar devices powered with an engine, propellant, open flame or other feature liable to start or cause a fire shall not be projected into or across hazardous fire areas without prior approval of the fire code official.

SEC. 96.1.307.5. ATTENDANCE OF OPEN BURNING AND RECREATIONAL FIRES.

Section 307.5 of the California Fire Code is revised to read:

Sec. 307.5 Attendance. Open burning, bonfires, recreational fires and the use of portable outdoor fireplaces shall be constantly attended by an adult until the fire is extinguished. A minimum of one portable fire extinguisher complying with section 906 with a minimum 4-A rating or other approved on-site fire-extinguishing equipment, such as dirt, sand, water barrel, garden hose or water truck, shall be available for immediate utilization.

SEC. 96.1.319. MID-RISE BUILDINGS.

Section 319 is added to the California Fire Code to read:

SECTION 319
MID-RISE BUILDINGS

Sec 319.1 General. A newly constructed mid-rise building or a mid-rise building which undergoes a complete renovation that requires the building to be completely vacated shall comply with this section.

Exceptions:

1. Buildings used exclusively as an open parking garage.

2. Buildings where all floors above the fourth floor level are used exclusively as an open parking garage.

3. Buildings such as a power plant, lookout tower, steeple, grain house, and other similar structures with intermittent human occupancy.

Sec. 319.1.1 Automatic fire sprinkler systems and standpipes. Mid-rise buildings shall be protected throughout by an automatic fire sprinkler system designed and installed in conformance with the latest edition of NFPA 13 and in accordance with the following:

1. A shut-off valve and a water flow alarm shall be provided for each floor. Each shut-off valve and water flow alarm shall be electronically supervised.

2. Mid-rise buildings shall be provided with a class I standpipe system that is interconnected with the automatic fire sprinkler system. The system shall consist of 2½-inch hose valves located in each stair enclosure on every floor. Two hose outlets shall be located on the roof outside of each stair enclosure which penetrates the roof. The standpipe system shall be designed, installed and tested in accordance with the latest edition of NFPA 14.

3. Fire department standpipe connections and valves serving each floor shall be located in the vestibule and located in a manner so as not to obstruct egress when hose lines are connected and charged.

Sec. 319.1.2 Smoke detection. Smoke detectors shall be provided in accordance with this section. Smoke detectors shall be connected to an automatic fire alarm system and shall be installed in accordance with the latest edition of NFPA 72. The actuation of any device required by this section shall operate the emergency voice alarm signal system and shall operate all equipment necessary to prevent the circulation of smoke through air return and exhaust ductwork. Smoke detectors shall be located as follows:

1. In every mechanical equipment, electrical, transformer, telephone equipment, unmanned computer equipment, elevator machinery or similar room and in all elevator lobbies. Elevator lobby detectors shall be connected to an alarm verification zone or be listed as a releasing device.

2. In the main return air and exhaust air plenum of each air conditioning system. The smoke detector shall be located in a serviceable area downstream of the last duct inlet.

3. At each connection to a vertical duct or riser serving two or more stories from a return air duct or plenum of an air conditioning system. In Group R, Division 1 and 2 occupancies, an approved smoke detector is allowed to be used in each return air riser carrying not more than 5,000 cubic feet per minute and not serving more than 10 air inlet openings.

4. For Group R, Division 1 and 2 occupancies, in all corridors serving as a means of egress for an occupant load of 10 or more persons.

Sec. 319.1.3 Fire alarm system. An approved and listed, automatic and manual, fully addressable and electronically-supervised fire alarm system shall be provided in conformance with this code and the California Building Code.

Sec. 319.1.3 Emergency voice alarm signaling system. The operation of any automatic fire detector or water flow device shall automatically sound an alert tone followed by a pre-recorded voice instruction giving appropriate information and direction on a general or selective basis to the following terminal areas:

1. Elevators
2. Elevator lobbies
3. Corridors
4. Exit stairways
5. Rooms and tenant spaces
6. Dwelling units
7. Hotel guest rooms
8. Areas designated as safe refuge within the building

Sec. 319.1.4 Fire command center. A fire command center for fire department operations shall be provided. The location and accessibility of the fire command center shall be approved by the fire department. The room shall be separated from the remainder of the building by not less than a 1-hour fire barrier. The room shall be a minimum of 200 square feet with a minimum dimension of 10 feet. It shall contain the following facilities at a minimum:

1. Voice alarm and public address panels
2. Fire department communications panel
3. Fire alarm enunciator panel
4. Elevator enunciator panel (when building exceeds 55 feet in height)
5. Status indicators and controls for air-handling systems (stairwell pressurization)
6. Controls for unlocking stairwell doors
7. Fire pump status indicators (if required)
8. Set of complete building plans
9. Elevator control switches for switching of emergency power
10. Work table

Sec. 319.1.5 Annunciation identification. Control panels in the central control station shall be permanently identified as to their function. Water flow, automatic fire detection and manually-activated fire alarms, and supervisory and trouble signals shall be monitored by an approved UL-listed central monitoring station and annunciated in the fire command center by means of an audible and visual indicator. For the purposes of annunciation, zoning shall be in accordance with the following:

1. When the system serves more than one building, each building shall be a separate zone.
2. Each floor in a building shall be a separate zone.
3. When one or more risers serve the same floor, each riser shall be a separate zone.

Sec. 319.1.6 Elevators. Elevators and elevator lobbies shall comply with Chapter 30 of the California Building Code. At least one elevator cab shall be assigned for fire department use, and shall serve all floors of the building. This cab shall be provided large enough to accommodate an ambulance-type stretcher in accordance with section 3002.4 of the California Building Code.

Sec. 319.1.7 Fire department communication system. An approved two-way fire department communication system designed and installed in accordance with the latest edition of NFPA 72 shall be provided for fire department use per section 907.2.13.2.

Sec. 319.1.8 Means of egress. In addition to the requirements of Chapter 10, egress components of mid-rise buildings shall comply with sections 319.1.8.1 through 319.1.8.5.

Sec. 319.1.8.1 Extent of enclosure. Stairway enclosures shall be continuous and shall fully enclose all portions of the stairway. Exit enclosures shall exit directly to the exterior of the building or include an exit passageway on the ground floor leading to the exterior of the building. Each exit enclosure shall extend completely through the roof and be provided with a door that leads onto the roof.

Sec. 319.1.8.2 Pressurized enclosures and stairways. All required stairways and enclosures in a mid-rise building shall be pressurized as specified in section 909. Pressurized stairways shall be designed to exhaust smoke manually when needed.

Sec. 319.1.8.3 Vestibules. Pressurized stairway enclosures serving a mid-rise building shall be provided with a pressurized entrance vestibule on each floor that complies with section 909.

Sec. 319.1.8.4 Pressure differences. The minimum pressure difference between a vestibule and adjacent areas shall comply with section 909.

Sec. 319.1.8.5 Locking of stairway doors. All stairway doors that are locked to prohibit access from the interior of the stairway shall have the capability of being unlocked simultaneously, without unlatching, upon a signal from the fire command center. Upon failure of normal electrical service or activation of any fire alarm, the locking mechanism shall automatically retract to the unlocked position.

A telephone or other two-way communication system connected to an approved emergency service which operates continuously shall be provided at not less than every third floor in each required exit stairway vestibule.

Approved signage stating doors are locked shall be provided in each stairwell vestibule on each floor in which entry may be made and on each floor in which a telephone is located. Hardware for locking stairway vestibule doors shall be State Fire Marshal listed and approved by the chief by permit before installation. Stairway doors located between the vestibules and the stairway shaft shall not be locked.

SEC. 96.1.320. STORAGE OF FIREWOOD.

Section 320 is added to the California Fire Code to read:

SECTION 320
STORAGE OF FIREWOOD

Sec. 320.1 General. Firewood shall not be stored in unenclosed space beneath a building or structure, on a deck or under eaves, a canopy or other projection or overhang. When required by the fire code official, firewood or other combustible material stored in the defensible space surrounding a structure shall be located at least 30 feet from any structure and separated from the crown of any trees by a minimum of 15 feet, measured horizontally. Firewood and combustible materials not for use on the premises shall be stored so as to not pose a fire hazard.

SEC. 96.1.501.3.1. FIRE APPARATUS ACCESS MODIFICATIONS.

Section 501.3.1 is added to the California Fire Code to read:

Sec. 501.3.1 Fire apparatus access modifications. Plans for the modification of fire apparatus access road shall be submitted to the fire code official for review and approval prior to construction or modification of any fire apparatus road.

SEC. 96.1.503. FIRE APPARATUS ACCESS ROADS

Section 503 of the California Fire Code is revised to read:

SECTION 503
FIRE APPARATUS ACCESS ROADS

Sec. 503.1 General. Fire apparatus access roads, including private residential driveways, shall be required for every building hereafter constructed when any portion of

an exterior wall of the first story is located more than 150 feet from the closest point of fire department vehicle access.

Fire apparatus access roads, except private residential driveways, shall be provided and maintained for purposes of rapid and reliable fire apparatus access and for unobstructed traffic circulation for evacuation or relocation of civilians during a wildfire or other emergency.

Fire apparatus access roads shall be provided and maintained in compliance with this section and the most recent edition and any amendments thereto, of public and private road standards as adopted by the County of San Diego (San Diego County Standards for Private Roads and Public Roads, San Diego County Department of Public Works). The fire code official may modify the requirements of this section if the modification provides equivalent access.

Sec. 503.1.1 Buildings and facilities. Approved fire apparatus access roads shall be provided for every facility, building or portion of building hereafter constructed or moved into or within the jurisdiction. The fire apparatus access road shall comply with the requirements of this section and shall extend within 150 feet of all portions of the facility and all portions of the exterior walls of the first story of the building as measured by an approved route around the exterior of the building or facility.

Exceptions: The fire code official may increase the 150 foot minimum where:

1. Fire apparatus access roads cannot be installed because of topography, waterways, nonnegotiable grades or other similar conditions, and an approved alternative means of fire protection is provided.

2. There are no more than two Group R-3 or Group U occupancies.

Sec. 503.1.2 Additional access. The fire code official is authorized to require more than one fire apparatus access road based on the potential for impairment of a single road by vehicle congestion, condition of terrain, climatic conditions or other factors that could limit access. When additional fire apparatus access roads are necessary as mitigation for the exceedance of the maximum allowable dead-end road length, the additional fire apparatus access road must be remote from the primary fire apparatus access road.

Sec. 503.1.3 Dead-end roads. The maximum length of a dead-end road, including all dead-end roads accessed from that dead-end road, shall not exceed the following cumulative lengths, regardless of the number of parcels served:

ZONING FOR PARCEL SERVED BY DEAD-END ROAD(s)	CUMULATIVE LENGTH OF DEAD-END ROAD(s)
Parcels zoned for less than 1 acre	800 feet
Parcels zoned for 1 acre to 4.99 acres	1,320 feet
Parcels zoned for 5 acres to 19.99 acres	2,640 feet
Parcels zoned for 20 acres or larger	5,280 feet

All lengths shall be measured from the edge of the roadway surface at the intersection where the road begins to the end of the road surface at its farthest point. Where a dead-end road crosses areas of differing zoned parcel sizes, requiring different length limits, the shortest allowable length shall apply. Where parcels are zoned 5 acres or larger, turnarounds shall be provided at a maximum of 1320 foot intervals. Each dead-end road shall have a turnaround approved by the fire code official and constructed at its terminus.

Sec. 503.1.4 High-piled storage. Fire department vehicle access to buildings used for high-piled combustible storage shall comply with the applicable provisions of Chapter 32.

Sec. 503.2 Specifications. Fire apparatus access roads shall be installed and arranged in compliance with sections 503.2.1 through 503.2.8.

Sec. 503.2.1 Dimensions. The dimensions of fire apparatus access roads shall be in accordance with the following:

(a) Fire apparatus access roads shall have an unobstructed improved width of not less than 24 feet, except for single-family residential driveways serving no more than two single-family dwellings, which shall have a minimum of 16 feet of unobstructed improved width. Any of the following, which have separated lanes of one-way traffic: gated entrances with card readers, guard stations or center medians, are allowed, provided that each lane is not less than 14 feet wide.

(b) Fire apparatus access roads that are public or private roads which are provided or improved as a result of a Tentative Map, Tentative Parcel Map or a Major/Minor Use Permit shall have the dimensions as set forth by the County of San Diego Standards for Public and Private Roads.

(c) All fire apparatus access roads shall have an unobstructed vertical clearance of not less than 13 feet 6 inches.

(d) Vertical clearances or road widths shall be increased when the fire code official determines that vertical clearances or road widths are not adequate to provide fire apparatus access.

(e) Vertical clearances or road width may be reduced when the fire code official determines the reduction does not impair access by fire apparatus. In cases where the vertical clearance has been reduced, approved signs shall be installed and maintained indicating the amount of vertical clearance.

(f) The standard cross-slope shall be 2 percent; minimum cross-slope shall be 1 percent; maximum cross-slope shall be 5 percent.

Sec. 503.2.2 Authority to increase minimums. The fire code official shall have the authority to require an increase in the minimum access road widths where the fire code official determines the minimum are inadequate for fire or rescue operations.

Sec. 503.2.3 Surface. Fire apparatus access roads shall be designed and maintained to support the imposed loads of fire apparatus (not less than 75,000 lbs. unless authorized by the fire code official) and shall be provided with an approved paved surface so as to provide all-weather driving capabilities. The paving and sub-base shall be installed to the standards specified in the County of San Diego Parking Design Manual. A residential driveway constructed of 3½" Portland cement concrete may be installed on any slope up to 20% provided that slopes over 15% have a deep broom finish perpendicular to the direction of travel to enhance traction. The fire code official may allow a surfacing material of 4 inches of decomposed granite on fire apparatus access roads with a slope of 10 percent or less in areas allowed by the San Diego County Standards for Private Roads.

Sec. 503.2.4 Roadway radius. The horizontal inside radius of a fire apparatus access road shall comply with the County public and private road standards approved by the Board of Supervisors. The horizontal inside radius for a private residential driveway shall be a minimum of 28 feet, as measured on the inside edge of the improvement width or as approved by the fire code official. The length of vertical curves of fire apparatus access roads shall not be less than 100 feet, or as approved by the fire code official.

Sec. 503.2.5 Dead ends. All dead-end fire access roads in excess of 150 feet in length shall be provided with approved provisions for turning around emergency apparatus. A cul-de-sac shall be provided in residential areas where the access roadway serves more than 2 structures. The minimum unobstructed radius width for a cul-de-sac in a residential area shall be 36 feet paved, 40 feet graded, or as approved by the fire code official. The fire code official shall establish a policy identifying acceptable turnarounds for various project types.

Sec. 503.2.6 Bridges and elevated surfaces. Where a bridge or an elevated surface is part of a fire apparatus access road, the bridge shall be constructed and maintained in accordance with AASHTO HB-17. Bridges and elevated surfaces shall be designed for a live load sufficient to carry the imposed loads of fire apparatus. Vehicle

load limits and clearance limitations shall be posted at both entrances to bridges when required by the fire code official. Where elevated surfaces designed for emergency vehicle use are adjacent to surfaces which are not designed for such use, approved barriers, approved signs or both shall be installed and maintained when required by the fire code official.

Sec. 503.2.6.1 Bridges with one traffic lane. When approved by the fire code official, private bridges providing access to not more than two residential dwellings may have one 12 foot wide travel lane; however, it shall provide for unobstructed visibility from one end to the other, and turnouts shall be provided at both ends.

Sec. 503.2.7 Grade. The gradient for a fire apparatus access roadway shall not exceed 15.0%. The fire code official may allow roadway grades up to 20.0% provided that the roadway surface conforms to section 503.2.3. The fire code official may require additional mitigation measures where he deems appropriate. The angle of departure and angle of approach of a fire access roadway shall not exceed 7 degrees (12 percent) or as approved by the fire code official.

Sec. 503.2.8 Roadway turnouts. When required by the fire code official, turnouts shall be a minimum of 12 feet wide and 30 feet long with a minimum 25 foot taper on each end.

Exception: The minimum width of the turnout may be reduced to 10 feet wide when the fire code official determines the reduction does not impair access by fire apparatus.

Sec. 503.3 Marking. When required by the fire code official, approved signs or other approved notices shall be provided for fire apparatus access roads to identify such roads or prohibit the obstruction thereof. Signs or notices shall be maintained in a clean and legible condition at all times and be replaced or repaired when necessary to provide adequate visibility. All new public roads, all private roads within major subdivisions and all private road easements serving four or more parcels shall be named. Road name signs shall comply with County of San Diego Department of Public Works Design Standard #DS-13.

Sec. 503.3.1 Fire lane designation. Where the fire code official determines that it is necessary to ensure adequate fire access, the fire code official may designate existing roadways as fire access roadways as provided by Vehicle Code section 22500.1.

Sec. 503.4 Obstruction of fire apparatus access roads. Fire apparatus access roads shall not be obstructed in any manner, including the parking of vehicles. The minimum road widths and clearances established in section 503.2.1 shall be maintained at all times.

Sec. 503.4.1 Traffic calming devices. Traffic calming devices (including, but not limited to, speed bumps, speed humps, speed control dips, etc.) shall be prohibited unless approved by the fire code official.

Sec. 503.5 Required gates or barricades. The fire code official is authorized to require the installation and maintenance of gates or other approved barricades across fire apparatus access roads, trails or other access ways, not including public streets, alleys or highways. Electric gate openers, where provided, shall be listed in accordance with UL 325. Gates intended for automatic operation shall be designed, constructed and installed to comply with the requirements of ASTM F2200.

Sec. 503.5.1 Secured gates and barricades. When required, gates and barricades shall be secured as approved by the fire code official. Roads, trails and other access ways that have been closed and obstructed in the manner prescribed by section 503.5 shall not be trespassed on or used unless authorized by the owner and the fire code official.

Exception: The restriction on use shall not apply to public officers acting within the scope of duty.

Sec. 503.5.2 School fences and gates. School grounds may be fenced and gates therein may be equipped with locks, provided that safe dispersal areas based on three square feet per occupant are located between the school and the fence. Such required safe dispersal areas shall not be located less than 50 feet from school buildings.

Every public and private school shall conform to Education Code section 32020, which states:

The governing board of every public school district and the governing authority of every private school, which maintains any building used for the instruction or housing of school pupils on land entirely enclosed (except for building walls) by fences or walls, shall, through the cooperation of local law enforcement and fire protection agencies having jurisdiction of the area, provide for the erection of gates in these fences or walls. The gates shall be of sufficient size to permit the entrance of ambulances, police equipment and fire-fighting apparatus used by law enforcement and fire protection agencies. There shall be no less than one access gate and there shall be as many of these gates as needed to ensure access to all major buildings and ground areas. If these gates are equipped with locks, the locking devices shall be designed to permit ready entrance by the use of chain or bolt-cutting devices.

Sec. 503.6 Security gates. No person shall install a security gate or security device across a fire access roadway without the fire code official's approval.

1. An automatic gate across a fire access roadway or driveway shall be equipped with an approved emergency key-operated switch overriding all command functions and opening the gate.
2. A gate accessing more than four residences or residential lots or a gate accessing hazardous institutional, educational or assembly occupancy group structure, shall also be equipped with an approved emergency traffic control-activating strobe light sensor or other device approved by the fire code official, which will activate the gate on the approach of emergency apparatus.
3. An automatic gate shall be provided with a battery back-up or manual mechanical disconnect in case of power failure.
4. An automatic gate shall meet fire department policies deemed necessary by the fire code official for rapid, reliable access.
5. When required by the fire code official, an automatic gate in existence at the time of adoption of this chapter is required to install an approved emergency key-operated switch or other mechanism approved by the fire code official, at an approved location, which overrides all command functions and opens the gate. A property owner shall comply with this requirement within 90 days of receiving written notice to comply.
6. Where this section requires an approved key-operated switch, it may be dual-keyed or equipped with dual switches provided to facilitate access by law enforcement personnel.
7. All gates providing access from a road to a driveway shall be located a minimum of 30 feet from the nearest edge of the roadway and shall be at least two feet wider than the width of the traffic lane(s) serving the gate.
8. Electric gate openers, where provided, shall be listed in accordance with UL 325. Gates intended for automatic operation shall be designed, constructed and installed to comply with the requirements of ASTM F2200.

SEC. 96.1.505. PREMISES IDENTIFICATION.

Section 505 of the California Fire Code is revised to read:

SECTION 505
PREMISES IDENTIFICATION

Sec. 505.1 Address numbers. Approved numbers and/or addresses shall be placed on all new and existing buildings and at appropriate additional locations, plainly visible and legible from the street or roadway fronting the property when approaching from either direction. The numbers shall contrast with their background and shall meet the following minimum size standards: 4" high with a ½" stroke for residential buildings, 6" high with a ½" stroke for commercial and multi-residential buildings and 12" high with a 1" stroke for industrial buildings. Additional numbers shall be required where deemed necessary by the fire code official, such as rear access doors, building corners and entrances to

commercial centers. The fire code official may establish different minimum sizes for numbers for various categories of projects.

Sec. 505.2 Street or road signs. Streets and roads shall be identified with approved signs. Temporary signs shall be installed at each street intersection when construction of new roadways allows passage by vehicles. Signs shall be of an approved size, weather resistant and be maintained until replaced by permanent signs.

Sec. 505.3 Easement address signs. A road easement which is not named differently from the roadway from which it originates shall have an address sign installed and maintained listing all street numbers occurring on that easement. The sign shall be located where the easement intersects the named roadway. The numbers on the sign shall contrast with the background and have a minimum height of 4" and a minimum stroke of ½".

Sec. 505.4 Directory map. A lighted directory map, meeting current fire department standards, shall be installed at the driveway entrance to a residential project or a mobile home park, with more than 15 units.

Sec. 505.5 Response map updates. Any new development which necessitates updating emergency response maps due to new structures, hydrants, roadways or similar features shall be required to provide map updates in a format compatible with current department mapping services and shall be charged a reasonable fee for updating all response maps. At a minimum, the map updates shall be provided in PDF or a CAD format approved by the FAHJ.

SEC. 96.1.506.1.3. EMERGENCY KEY ACCESS.

Section 506.1.3 is added to the California Fire Code portion to read:

Sec. 506.1.3 Emergency key access. All central station-monitored fire detection systems and fire sprinkler systems shall have an approved emergency key access box on site in an approved location. The owner or occupant shall provide and maintain current keys for any structure for fire department placement in the box and shall notify the fire department in writing when the building is re-keyed.

SEC. 96.1.507.2. TYPE OF WATER SUPPLY.

Section 507.2 of the California Fire Code is revised to read:

Sec. 507.2 Type of water supply. Water supply may consist of reservoirs, pressure tanks, elevated tanks, water mains or other fixed systems, as approved by the fire code official, capable of providing the required fire flow in a reliable manner. In setting the

requirements for fire flow, the fire code official shall follow section 507.3 or Appendix B of the County Fire Code, or the standard published by the Insurance Services Office, "Guide for Determination of Required Fire Flow".

Sec. 507.2.1 Private fire service mains. Private fire service mains and appurtenances shall be installed in accordance with NFPA 24.

Sec. 507.2.2 Water tanks. Water tanks for private residential fire protection, when authorized by the fire code official, shall comply with Table 507.2.2 and installed in accordance with NFPA 22. Water tanks for commercial fire protection, when authorized by the fire code official, shall be sized utilizing nationally-recognized standards.

TABLE 507.2.2 RESIDENTIAL WATER TANK REQUIREMENTS			
Building Square Feet	Gallons Per Minute Water Flow	Capacity Gallons	Duration Minutes
Up to 1,500	250	5,000	20
Over 1,500	250	10,000	40
When the exposure distance is one hundred feet (100') or less from an adjacent property, or where additional hazards or higher fire flow exists, the required water storage may be modified by the fire code official.			

1. Tank bottom elevation shall be equal to or higher than the fire department connection on the premises. Regardless of domestic use, all tanks shall be equipped with a device that will ensure that the tank contains the designated amount of water for fire flow duration as determined by the FAHJ. Tank size may be increased to serve multiple structures on a single parcel.

2. Supply outlet shall be at least 4 inches in diameter from the base of the tank to the point of outlet at the fire department connection. The fire department connection shall have an approved means of controlling water flow. The fire department connection shall be at least one 4-inch National Standard Thread (male), reduced to one 2½ inch National Standard Thread (male). Additional outlets may be required.

3. Location of fire department outlet shall be shown on the plot plan when submitted to the FAHJ. Consideration will be given to topography, elevations, and distance from structures, driveway access, prevailing winds, etc.

4. The outlet shall be located along a fire apparatus access roadway and shall not be closer than 50 feet or further than 150 feet from the structure.

5. All exposed tank supply pipes shall be of an alloy or other material listed for above ground use. Adequate support shall be provided.

6. Water storage tanks shall be constructed from materials approved by the fire code official and installed per manufacturer recommendations.

7. The fire code official may require any necessary information to be submitted on a plot plan for approval.

8. Vessels previously used for products other than water shall not be allowed.

9. The bottom of the water storage tank shall be level with or above the building pad.

SEC. 96.1.507.3. FIRE FLOW.

Section 507.3 of the California Fire Code is revised to read:

Sec. 507.3 Fire flow. Fire flow requirements shall be based on Appendix B of the County Fire Code or the standard published by the Insurance Services Office, "Guide for Determination of Required Fire Flow." Consideration should be given to increasing the gallons per minute to protect structures of extremely large square footage and for such reasons as: poor access roads, grade and canyon rims, hazardous brush and response times greater than five minutes by a recognized fire department or fire suppression company. In hazardous fire areas the main capacity for new subdivisions shall not be less than 2,500 gallons per minute, unless otherwise approved by the fire code official. If fire flow increases are not feasible, the fire code official may require alternative design standards such as: alternative types of construction that provides a higher level of fire resistance, fuel break requirements, which may include required irrigation, modified access road requirements, specified setback distances for building sites addressing canyon rim developments and hazardous brush areas, and other requirements as authorized by this chapter and as required by the fire code official.

SEC. 96.1.507.5.1. FIRE PROTECTION WATER SUPPLIES-REQUIRED INSTALLATIONS.

Section 507.5.1 of the California Fire Code is revised to read:

Sec. 507.5.1 Required installations. The location, type and number of fire hydrants connected to a water supply capable of delivering the required fire flow shall be provided on the public or private street, or on the site of the premises to be protected or both. Fire hydrants shall be accessible to the fire department apparatus by roads meeting the requirements of section 503.

Sec. 507.5.1.1 Location of fire hydrants. Fire hydrants shall be located as required by the fire code official using the following criteria and taking into consideration departmental operational needs. Hydrants shall be located at intersections, at the beginning radius of cul-de-sacs and at intervals identified in the following tables and criteria. Hydrants located across heavily traveled roadways shall be not considered as serving the subject property.

Sec. 507.5.1.1.1 Requirements for single-family dwellings. In projects zoned for single-family dwellings, fire hydrants shall be installed in accordance with Table 507.5.1.1.1.

TABLE 507.5.1.1.1 DISTANCE BETWEEN HYDRANTS FOR SINGLE FAMILY DWELLINGS	
Parcels 2½ acres and larger:	Every 1,000 feet
Parcels ½ to 2½ acres:	Every 500 feet
Parcels less than ½ acre:	Every 350 feet

Sec. 507.5.1.1.2 Requirements for multi-family, commercial and industrial zones. In multi-family, commercial and industrial zones, fire hydrants shall be installed at intersections, at the beginning radius of cul-de-sacs and every 300 feet of fire apparatus access roadways, regardless of parcel size.

Sec. 507.5.1.1.3 Fire hydrant construction and configuration. All fire hydrants shall be of bronze construction, including all internal parts except seats. Alternative materials may be used if approved by the fire code official and the local water district having jurisdiction. The stems shall be designed and installed in a manner that will ensure that they will not be projected outward from the main body by internal water pressure due to disassembly. The number and size of fire hydrant outlets shall be as follows:

1. One 4 inch and one 2½ inch NST outlet.
2. One 4 inch and two 2½ inch NST outlets.

In some instances the fire code official may require a fire hydrant to have any other combination of 4 inch and 2½ inch outlets.

Sec. 507.5.1.2 Waterline extensions. The fire code official may require a waterline extension for the purpose of installing a fire hydrant if a water main is 1,500 feet or less from the property line.

Sec. 507.5.1.3 Hydrant for standpipe systems. Buildings equipped with a standpipe system installed in accordance with section 905 shall have a fire hydrant within 100 feet of the fire department connections.

Exception: The distance shall be permitted to exceed 100 feet where approved by the fire code official.

SEC. 96.1.507.5.7. FIRE HYDRANT AND FIRE VALVE LOCATION.

Section 507.5.7 is added to the California Fire Code to read:

Sec. 507.5.7 Fire hydrant and fire valve location. The fire hydrant or fire valve shall be between 14 to 24 inches above grade, no closer than 4 feet nor further than 12 feet from the roadway, and 8 feet from combustible vegetation.

Sec. 507.5.7.1 Signing of water sources and fire department connections. The fire code official may require fire hydrants and fire department connections to be identified. Fire hydrants may be identified by a reflectorized blue marker and fire department connections may be identified by a reflectorized green marker, with a minimum dimension of 3 inches, in the center of the travel lane adjacent the water source, or by other methods approved by the fire code official.

SEC. 96.1.603.6.6. SPARK ARRESTERS.

Section 603.6.6 is added to the California Fire Code to read:

Sec. 603.6.6 Spark arresters. All structures having a chimney, flue or stovepipe attached to a fireplace, stove, barbecue or other solid or liquid fuel burning equipment or device shall have the chimney, flue or stovepipe equipped with an approved spark arrester. An approved spark arrester is a device intended to prevent sparks from escaping into the atmosphere, constructed of welded or woven wire mesh, 12 gauge thickness or larger, with openings no greater than ½ inch, or other alternative material the FAHJ determines provides equal or better protection.

SEC. 96.1.603.8.1. RESIDENTIAL INCINERATORS.

Section 603.8.1 of the California Fire Code is revised to read:

Sec. 603.8.1 Residential Incinerators. Residential incinerators are prohibited in the unincorporated area of the County.

SEC. 96.1.605.11.3.3.3 SMOKE VENTILATION.

Section 605.11.3.3.3 of the California Fire Code is revised to read:

Sec. 605.11.3.3.3 Smoke ventilation. The solar photovoltaic installation shall be designed to meet the following requirements:

1. Arrays shall be no greater than 150 feet in length in either axis in order to create opportunities for smoke ventilation operations.
2. Smoke ventilation options between array sections shall be one of the following:
    a. A pathway 8 feet or greater in width
    b. A pathway 4 feet or greater in width and bordering roof skylights or smoke and heat vents
    c. A pathway 4 feet or greater in width and bordering 4 foot by 8 foot venting cutouts every 20 feet on alternating sides of the pathway.

The fire code official may require additional means of ventilating a building including the installation of a manually-operated ventilation system.

SEC. 96.1.605.11.4 GROUND-MOUNTED PHOTOVOLTAIC ARRAYS.

Section 605.11.4 the California Fire Code is revised to read:

Sec. 605.11.4 Ground-mounted photovoltaic arrays. Ground-mounted photovoltaic array installations shall meet the requirements of sections 605.11.4.1 through 605.11.4.4.

Sec. 605.11.4.1 Fire apparatus access roads. Fire apparatus access roads to ground-mounted photovoltaic arrays, associated equipment structures and operations/maintenance buildings shall comply with section 503.

> **Exception:** Private residential and agricultural systems less than 10 acres in size and where the energy generated is primarily for on-site use are exempt from this requirement.

Sec. 605.11.4.1.1 Perimeter fire apparatus access roadway. Ground-mounted photovoltaic arrays 10 acres or larger in size shall provide a fire apparatus access roadway around the perimeter of the project. The perimeter fire apparatus access roadway shall comply with section 503.

Sec. 605.11.4.2 Fuel modification. Combustible vegetation within the array and to a distance of 30 feet from the array and associated equipment shall be reduced to a

height of no more than 6 inches. The fuel modification zone may be increased when required by the fire code official or as recommend by a fire protection plan.

> **Exception:** For private residential and agricultural systems less than 10 acres in size and where the energy generated is used primarily on-site, the required fuel modification zone may be reduced to 10 feet from the array and associated equipment.

Operation/maintenance buildings shall be provided with fuel modification zones that comply with section 4907.2.

Sec. 605.11.4.3 Water supply. Water supply for fire protection and suppression shall be provided for equipment structures and operations/maintenance buildings as required by section 507.

Sec. 605.11.4.4 Identification. Ground-mounted photovoltaic arrays with multiple equipment structures shall include a means of readily identifying each equipment structure. The fire code official may require a lighted directory map of the project to be installed on-site near the entrance to the facility for projects of 10 or more acres in size.

SEC. 96.1.901.4.7. FIRE DEPARTMENT CONNECTIONS.

Section 901.4.7 is added to the California Fire Code to read:

Sec. 901.4.7 Fire department connections. Fire hose threads used in connection with fire-extinguishing systems shall be National Standard Thread or as approved by the FAHJ. The location of fire department hose connections and control valves shall be approved by the fire code official.

SEC. 96.1.901.8.2. FIRE HYDRANTS AND FIRE APPLIANCES.

Section 901.8.2 is added to the California Fire Code to read:

Sec. 901.8.2 Fire hydrants and fire appliances. Commercial fire sprinkler system control valves shall not be shut off after activation of the sprinkler system, no matter what the reason for the activation until the shut off is authorized by fire personnel. Fire detection systems activated by fire, smoke, heat or any other cause shall not be reset until authorized by fire personnel.

SEC. 96.1.903.2 AUTOMATIC SPRINKLER SYSTEMS-WHERE REQUIRED.

Section 903.2 of the California Fire Code is revised to read:

903.2 Where required. Approved automatic fire sprinkler systems shall be installed in all new structures. For the purpose of fire sprinkler systems, buildings separated by less than 10 feet from adjacent buildings shall be considered one building. Fire barriers and partitions, regardless of rating, shall not be considered as creating separate buildings for purposes of determining fire sprinkler requirements. Mezzanines shall be included in the total square footage calculation.

Exceptions:

1. Group U occupancies not greater than 500 square feet, when the building is more than 20 feet from an adjacent structure or property line.

2. Accessory buildings/barns not greater than 1000 square feet, and not otherwise considered enclosed buildings/structures, which are of ignition-resistant construction or as determined by the fire code official to not present a significant fire hazard.

3. Agricultural buildings constructed of wood or metal frames over which fabric or similar material is stretched, which are specifically used as green houses are exempt from the automatic sprinkler requirements unless physically connected to other structures.

903.2.1 Additions. An automatic fire sprinkler system may be required to be installed throughout structures when the addition is more than 50% of the existing building or when the altered building will exceed a fire flow as calculated pursuant to section 507.3. The fire code official may require an automatic sprinkler system to be installed in buildings where no water main exists to provide the required fire flow or where a special hazard exists, such as poor access roads, steep grades and canyon rims, hazardous brush and response times greater than 5 minutes by a fire department. The fire code official may require that other protective measures be taken based on existing conditions and/or potential hazards.

903.2.2 Remodels or reconstructions. The fire code official may require an automatic sprinkler to be installed throughout structures if a remodel or reconstruction includes significant modification to the interior or roof of the building and the cost of the installation of an automatic sprinkler system does not exceed 15 percent of the construction costs of the remodel or reconstruction, or require vacancy of the building. The fire code official may require that other protective measures be taken based on existing conditions and/or potential hazards.

SEC. 96.1.903.4. SPRINKLER SYSTEM MONITORING AND ALARMS.

Section 903.4 of the California Fire Code is revised to read:

Sec. 903.4 Sprinkler system supervision and alarms. All valves controlling the water supply for automatic sprinkler systems, pumps, tanks, water levels and temperatures, critical air pressures and water-flow switches on all sprinkler systems shall be electronically supervised by a listed fire alarm control unit.

Exceptions:

1. Automatic sprinkler systems with less than 100 fire sprinklers protecting one-family and two-family dwellings.

2. Limited area systems serving fewer than 20 sprinklers.

3. Automatic sprinkler systems installed in accordance with NFPA 13R where a common supply main is used to supply both domestic water and the automatic sprinkler system and a separate shutoff valve for the automatic sprinkler system is not provided.

4. Jockey pump control valves that are sealed or locked in the open position.

5. Control valves to commercial kitchen hoods, paint spray booths or dip tanks that are sealed or locked in the open position.

6. Valves controlling the fuel supply to fire pump engines that are sealed or locked in the open position.

7. Trim valves to pressure switches in dry, preaction and deluge sprinkler systems that are sealed or locked in the open position.

SEC. 96.1.2808. STORAGE AND PROCESSING OF WOOD CHIPS, HOGGED MATERIAL, FINES, COMPOST AND RAW PRODUCT ASSOCIATED WITH YARD WASTE AND RECYCLING FACILITIES.

Section 2808 of the California Fire Code is revised to read:

SECTION 2808
STORAGE AND PROCESSING OF WOOD CHIPS, HOGGED MATERIALS, FINES, COMPOST AND RAW PRODUCT ASSOCIATED WITH YARD WASTE AND RECYCLING FACILITIES

Sec. 2808.1 General. The storage and processing (mulching, composting) of wood chips, hogged materials, fines, compost and raw product produced from yard waste, debris and recycling facilities shall be in accordance with section 2808.

Sec. 2808.2 Definitions. The following terms are defined in section 202:

AERATED STATIC PILE.
CHIPPING AND GRINDING.
COMPOSTING OPERATION.
GREENWASTE.
HOGGED MATERIALS.
MULCHING.
STATIC PILE.
WINDROW COMPOSTING PROCESS.
WOOD CHIPS.

Sec. 2808.3 Permit required. A permit shall be obtained from the fire code official prior to engaging in the operation and storing processed of wood chips, hogged material, fines, compost and raw product in association with yard waste and similar material recycling facilities. The permit shall be renewed on an annual basis or shall be limited to such period of time as designated by the fire code official. Permits shall not be transferable and any change in use, location, occupancy, operation or ownership shall require a new permit.

Sec. 2808.4 Financial assurance for cost recovery. A security bond, irrevocable letter of credit or other approved form of financial assurance shall be required to be posted, in an amount determined by the fire code official. The financial assurance shall be a minimum of $25,000.00 and a maximum of $100,000.00, depending on the size of operation. The financial assurance shall reimburse the fire department for expenses incurred in any emergency response and/or enforcement action by the fire department to protect the public from fire or hazardous substances related to the operation. The financial assurance shall be returned to the operator in a timely fashion once the operation is closed, to the satisfaction of the fire code official.

Sec. 2808.5 Operational and emergency plans. The following operational and emergency action plans shall be submitted to and be approved by the fire code official prior to initiating an operation under section 2808:

1. Operational Plan. The operational plan shall include: Site layout, pile dimensions, fire access, water supply, site security, site operations, temperature monitoring, rotation and diversion plan.

2. Emergency Plan. The emergency plan shall include: Operator fire response actions, fire dispersal area, emergency equipment operator callback and initiation of incoming diversion plan. All plans shall define the equipment necessary to process and handle the materials.

Sec. 2808.6 Notification of fire department. The operator shall report all fires to the fire department immediately upon discovery.

Sec. 2808.7 Equipment operator emergency callback. The operator shall implement and maintain a plan for rapid equipment operator response to the site. The maximum response time to the site shall be within one hour of a fire department notification. The following equipment shall be on site and staffed with skilled operators: bulldozer, loaders and heavy duty equipment necessary to mitigate a fire. Notification procedure shall be maintained operational 24 hours a day, seven days a week. Notification may be by pager activation, telephone answering service, or other approved means.

Sec. 2808.8 Incoming waste diversion plan. The operator shall develop a diversion plan for incoming greenwaste for implementation in the event of equipment failure or other inability to process and distribute greenwaste. The plan shall prevent stockpiling of waste on the site and unauthorized depositing of waste on or near the site. The operator shall initiate the diversion plan based on criteria in the Operational and Emergency Plan without further direction from the fire department.

Sec. 2808.9 Unprocessable or non-greenwaste material. All greenwaste that cannot be processed on-site, such as stumps and fibrous plants, shall be immediately removed from the feedstock, stored in roll-off containers or bins and be removed from the facility on a weekly basis. All plastic bags shall be removed prior to shredding material.

Sec. 2808.10 Fire access roadway. A fire access roadway shall be provided to the site and on the site. Each roadway shall be at least 20 feet wide, but the fire official may require a greater width, depending on site conditions. The operator shall also be required to obtain the fire code official's approval for the type of driving surface for the onsite access roadway.

Sec. 2808.11 Storage sites. Storage sites shall be level and on solid ground or other approved all-weather surface.

Sec. 2808.12 Combustible vegetation control. The operator shall clear any combustible material, weeds, brush, trees or other vegetation (including mulch) that is or may become, dry and capable of transmitting fire, from within 50 feet of raw greenwaste and mulch piles. Clearance shall be to bare earth or approved pavement. Individual growing trees within that distance may remain, subject to the fire code official's approval.

Sec. 2808.13 Pile separation. Piles shall be separated from adjacent piles and property lines by fire department access roadways.

Sec. 2808.14 Size of piles. Pile height, width and length shall be limited to criteria approved by the fire code official, based in part on the site material handling equipment. In no case shall a pile exceed 12 feet in height, 100 feet in width and 200 feet in length.

Sec. 2808.15 Static pile protection. Interior pile temperatures shall be monitored and recorded on a regular basis per the Operational Plan. Internal pile temperatures shall be taken at ⅔ the pile height, 12 to 24 inches from the surface with a probe-type thermometer. Readings shall be made at not greater than 50-foot intervals along the length of the pile. Temperatures above 158° F are known to adversely affect microbial decomposition and are considered excessive. Infrared thermometers may be used to monitor for hot spots at the surface, but are not a substitute for internal probe measurement and documentation. Once windrows exceed 170° F, the windrows shall be reduced in size, be rotated and be monitored daily until temperatures drop below 158° F. All greenwaste stockpiles shall be re-mixed as necessary to alleviate any fire due to spontaneous combustion or temperatures above 170° F. Windrows shall be visually inspected on a regular basis. Once fires have been detected in any windrows at a site, this visual inspection shall be a minimum daily requirement. Daily inspections shall continue until the threat of fire no longer exists and the fire code official agrees inspections may be discontinued. All temperature and pile-handling records shall be kept on file at the site and be made available for inspection by fire department personnel. Data shall include date, time, temperature, specific location and person conducting measurement.

Sec. 2808.16 Firefighting water supplies and storage. Firefighting water supplies shall conform to sections 2808.16.1 or 2808.16.2.

Sec. 2808.16.1 Public water supply. The operator shall provide and maintain approved fire hydrants and waterline mains as required by the fire code official. Water lines may be approved aboveground lines supplied from a reliable water supply with adequate protection against impact and fire flow reaction. Hydrant spacing shall be at 400-foot intervals along primary fire access roadways. Fire flow at each hydrant shall be least 1000 gallons per minute at 20 psi. Duration of the required fire flow shall be as determined by the fire code official.

Sec. 2808.16.2 Private water supply. Above-ground water storage tanks may be installed when authorized by the fire code official where public water supply is not adequate to meet fire flow requirements. Volume and duration of the required fire flow shall be as determined by the fire code official.

Sec. 2808.17 Material-handling equipment. Equipment used on all piles should be of a type that minimizes compaction. All vehicles operating on or around the piles shall have a Class A fire extinguisher of a minimum 2-A rating, in addition to the Class B rating appropriate for the vehicles. Approved material-handling equipment shall be available during fire fighting operations for moving wood chips, hogged material, compost and raw product produced from yard waste and wood fines.

Sec. 2808.18 General safety rules for site equipment maintenance. Welding or cutting torch operations shall be conducted a minimum of 30 feet from combustible materials. A fire watch shall be provided to detect fire, and to operate fire-extinguishing equipment throughout the welding or cutting operation and 30 minutes thereafter. Refueling and on-site maintenance shall meet California Fire Code requirements in Chapters 23 & 57 and all other applicable fire code requirements.

Sec. 2808.19 Site security. Pile storage areas shall be surrounded with approved fencing. Fences shall be a minimum of 6 feet in height.

Sec. 2808.20 Smoking and open burning prohibited. The operator shall prohibit smoking and open flame on the operational site, including smoking within vehicles. Approved signs shall be clearly and prominently posted, and shall be enforced by the site operators. No open burning shall be allowed on site.

SEC. 96.1.3206.2. GENERAL FIRE PROTECTION AND LIFE SAFETY FEATURES.

Section 3206.2 Exception J of Table 3206.2 of the California Fire Code is deleted.

SEC. 96.1.3318. FUEL MODIFICATION ZONE REQUIREMENTS

Section 3318 is added to the California Fire Code to read:

3318
FUEL MODIFICATION ZONE REQUIREMENTS

Sec. 3318.1 Fuel modification zone during construction. Any person doing construction of any kind which requires a permit under this code or the County Building Code shall install a fuel modification zone prior to allowing any combustible material to arrive on the site and shall maintain the zone during the duration of the project.

SEC. 96.1.4902. DEFINITIONS.

Section 4902 of the California Fire Code is revised to read:

SECTION 4902
DEFINITIONS

Sec. 4902.1 General. For the purposes of this chapter, certain terms are defined as follows:

BUILDING OFFICIAL means the Director of the Planning and Development Services or any person appointed or hired by the Director to administer or enforce the County's

planning and construction standards. The building official duties shall include plan checking, inspections and code enforcement.

CDF DIRECTOR means the Director of the California Department of Forestry and Fire Protection.

COMBUSTIBLE VEGETATION means material that in its natural state will readily ignite, burn and transmit fire from native or landscape plants to any structure or other vegetation. Combustible vegetation includes dry grass, brush, weeds, litter or other flammable vegetation that creates a fire hazard.

DEFENSIBLE SPACE is an area either natural or man-made, where material capable of allowing a fire to spread unchecked has been treated, cleared or modified to slow the rate and intensity of an advancing wildfire and to create an area for fire suppression operations to occur. Distance measurements for defensible space shall be measured on a horizontal plane.

FIRE PROTECTION PLAN (FPP) is a document prepared for a specific project or development proposed in the wildland-urban interface fire area that describes ways to minimize and mitigate potential loss from wildfire exposure, with the purpose of reducing impact on the community's fire protection delivery system.

FIRE HAZARD SEVERITY ZONES are geographical areas designated pursuant to California Public Resources Code sections 4201 through 4204 and classified as Very High, High and Moderate in State Responsibility Areas or as Local Agency Very High Fire Hazard Severity Zones designated pursuant to California Government Code sections 51175 through 51189.

The California Code of Regulations, Title 14, Section 1280 entitles maps of these geographical areas as "Maps of the Fire Hazard Severity Zones in the State Responsibility Area of California."

FUEL BREAK is an area, strategically located for fighting anticipated fires, where the native vegetation has been permanently modified or replaced so that fires burning into it can be more easily controlled. Fuel breaks divide fire-prone areas into smaller areas for easier fire control and to provide access for fire fighting.

LOCAL AGENCY VERY HIGH FIRE HAZARD SEVERITY ZONE means an area designated by a local agency upon the recommendation of the CDF Director pursuant to Government Code sections 51177(c), 51178 and 51189 that is not a State Responsibility Area and where a local agency, city, county, city and county, or district is responsible for fire protection.

OPEN SPACE EASEMENT means any right or interest in perpetuity or for a term for years in open-space land, as that term is defined in Government Code section 51051, acquired by the County, a city or a nonprofit organization where the instrument granting the right or interest imposes restriction on use of the land, to preserve the land for public use or enjoyment of the natural or scenic character of the land.

OPEN SPACE PRESERVE means open-space land, as that term is defined in Government Code section 65560(b), for the preservation of natural resources, managed production of resources, outdoor recreation, public health and safety, buffer for a military installation or the protection of cultural resources.

SLOPE is the variation of terrain from the horizontal; the number of feet, rise or fall per 100 feet, measured horizontally, expressed as a percentage.

STATE RESPONSIBILITY AREA means lands that are classified by the Board of Forestry pursuant to Public Resources Code section 4125 where the financial responsibility of preventing and suppressing forest fires is primarily the responsibility of the State.

TREE CROWN means the primary and secondary branches growing out from the main stem, together with twigs and foliage.

WILDFIRE is any uncontrolled fire spreading through vegetative fuels that threaten to destroy life, property, or resources as defined in Public Resources Code sections 4103 and 4104.

WILDFIRE EXPOSURE is one or a combination of radiant heat, convective heat, direct flame contact and burning embers being projected by vegetation fire to a structure and its immediate environment.

WILDLAND-URBAN INTERFACE FIRE AREA is a geographical area identified by the state as a "Fire Hazard Severity Zone" in accordance with the Public Resources Code sections 4201 through 4204 and Government Code sections 51175 through 51189, or other areas designated by the enforcing agency to be at a significant risk from wildfires.

SEC. 96.1.4903. FIRE PROTECTION PLAN.

Section 4903 of the California Fire Code is revised to read:

SECTION 4903
FIRE PROTECTION PLAN

Sec. 4903.1 When required. Planning and Development Services or the FAHJ may require an applicant for a parcel map, subdivision map, specific plan or major use permit for any property located in a wildland-urban interface fire area to submit a Fire Protection Plan (FPP) as part of the approval process.

Sec. 4903.2 Content. The FPP shall consider location, topography, geology, aspect, combustible vegetation (fuel types), climatic conditions and fire history. The plan shall address the following in terms of compliance with applicable codes and regulations including but not limited to: water supply, vehicular and emergency apparatus access, travel time to nearest serving fire station, structural ignitability, structure set back, ignition-resistive building features, fire protection systems and equipment, impacts to existing emergency services, defensible space and vegetation management.

The FPP shall be prepared as prescribed in the County of San Diego Land Use and Environment Group "Guidelines for Determining Significance and Report Format and Content Requirements for Wildland Fire and Fire Protection" document.

SEC. 96.1.4905. WILDFIRE PROTECTION BUILDING CONSTRUCTION.

Section 4905 of the California Fire Code is revised to read:

SECTION 4905
WILDFIRE PROTECTION BUILDING CONSTRUCTION

Sec. 4905.1 Construction methods for exterior wildfire exposure. The construction methods for exterior wildfire exposure in a wildland-urban interface fire area shall be as provided in Chapter 7A of the County Building Code.

SEC. 96.1.4907. DEFENSIBLE SPACE.

Section 4907 of the California Fire Code is revised to read:

SECTION 4907
DEFENSIBLE SPACE

Sec. 4907.1 Structure setbacks from property lines. The building official shall establish the minimum setbacks for locating a structure on a lot in a wildland-urban interface fire area. The setbacks may be greater than the minimum setbacks provided in the County Zoning Ordinance, when necessary to protect a structure from an unreasonable hazard from a wildfire.

Sec. 4907.1.1 General fire setbacks. Buildings and structures shall be setback a minimum of 30 feet from property lines and biological open space easements unless the

County Zoning Ordinance requires a greater minimum. When the property line abuts a roadway the setback shall be measured from the centerline of the roadway.

> **Exception:** When both the building official and the FAHJ determine that the hazard from a wildland fire is not significant or when the terrain, parcel size or other constraints on the parcel make the required setback infeasible, the building official may allow the setback to be less than 30 feet when allowed by the Zoning Ordinance.

Sec. 4907.1.2 Fire setbacks adjacent protected areas. Buildings and structures shall be setback a minimum of 100 feet from any property line adjacent a national forest, state park or open space preserve. This setback may be reduced when additional mitigation measures are employed that are satisfactory to both the FAHJ and the building official.

Sec. 4907.2 Fuel modification. A fuel modification zone shall be required around every building that is designed primarily for human habitation or use or a building designed specifically to house farm animals. Decks, sheds, gazebos, freestanding open-sided shade covers and similar accessory structures less than 250 square feet and 30 feet or more from a dwelling, and fences more than 5 feet from a dwelling, are not considered structures for the establishment of a fuel modification zone. A fuel modification zone shall comply with the following:

(a) When a building or structure in a hazardous fire area is located 100 feet or more from the property line, the person owning or occupying the building or structure shall maintain a fuel modification zone within 100 feet of the building or structure. The area within 50 feet of a building or structure shall be cleared of vegetation that is not fire resistant and re-planted with fire-resistant plants. In the area between 50 to 100 feet from a building, all dead and dying vegetation shall be removed. Native vegetation may remain in this area provided that the vegetation is modified so that combustible vegetation does not occupy more than 50% of the square footage of this area. Weeds and annual grasses shall be maintained at a height not to exceed 6 inches. The chips from chipping of vegetation that is done on-site may remain if the chips are dispersed so they do not exceed 6 inches in depth. Trees may remain in both areas provided that the horizontal distance between crowns of adjacent trees and crowns of trees and structures is not less than 10 feet. See Figure 4907.2.

(b) When a building or structure in a hazardous fire area is setback less than 100 feet from the property line, the person owning or occupying the building or structure shall meet the requirements in subsection (a) above, to the extent possible, in the area between the building or structure and the property line.

(c) The building official and the FAHJ may provide lists of prohibited and recommended plants.

(d) The fuel modification zone shall be located entirely on the subject property unless approved by the FAHJ. This required fuel modification zone may be reduced as allowed in subsection (b) above or increased as required by a fire protection plan.

(e) When the subject property contains an area designated to protect biological or other sensitive habitat or resource, no building or other structure requiring a fuel modification zone shall be located so as to extend the fuel modification zone into a protected area.

FIGURE 4907.2 MEASUREMENTS OF FUEL MODIFICATION DISTANCE

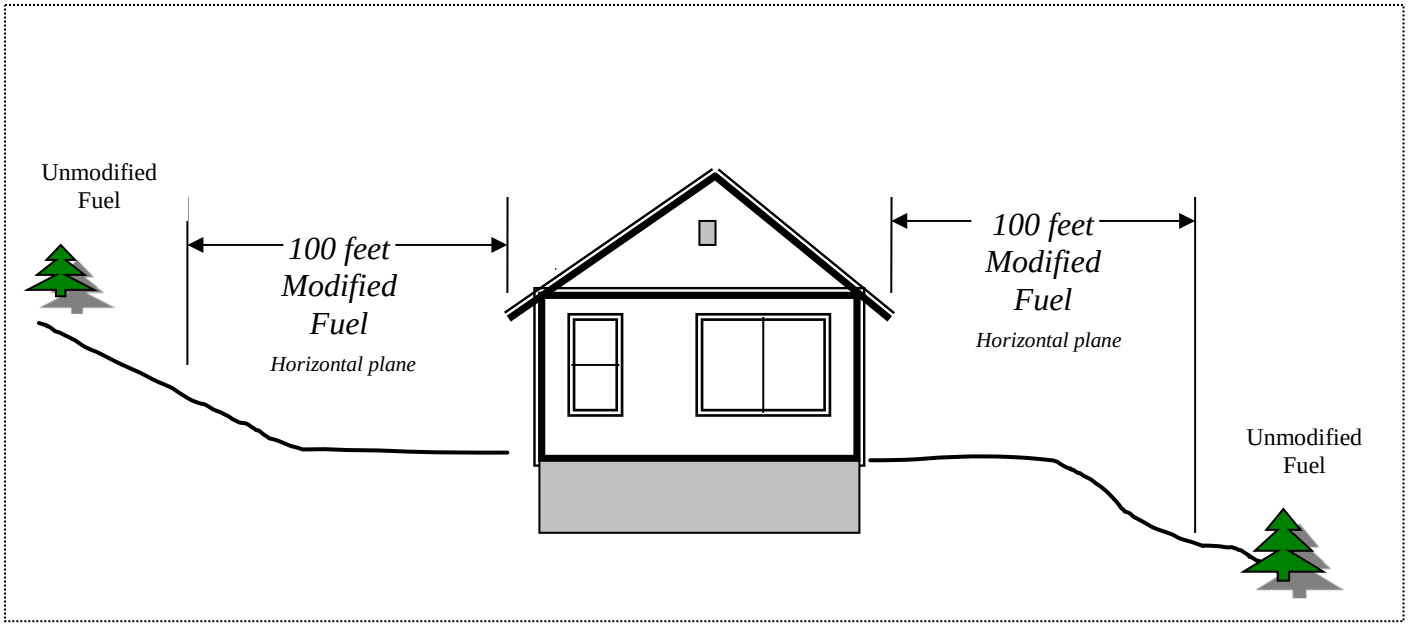

Sec. 4907.2.1 Fuel modification of combustible vegetation from sides of roadways. The FAHJ may require a property owner to modify combustible vegetation in the area within 20 feet from each side of the driveway or a public or private road adjacent to the property to establish a fuel modification zone. The FAHJ has the right to enter private property to insure the fuel modification zone requirements are met.

Exception: The FAHJ may reduce the width of the fuel modification zone if it will not impair access.

Sec. 4907.2.2 Community fuel modification. The FAHJ may require a developer, as a condition of issuing a certificate of occupancy, to establish one or more fuel

modification zones to protect a new community by reducing the fuel loads adjacent to a community and structures within it. The developer shall assign the land on which any fuel modification zone is established under this section to the association or other common owner group that succeeds the developer as the person responsible for common areas within the community.

Sec. 4907.2.2.1 Land ownership. Once a fuel modification zone has been established under section 4907.2.2 the land on which the zone is located shall be under the control of an association or other common ownership established in perpetuity, for the benefit of the community to be protected.

Sec. 4907.3 Maintenance of defensible space. Any person owning, leasing, controlling, operating or maintaining a building or structure required to establish a fuel modification zone pursuant to section 4907.2 shall maintain the defensible space. The FAHJ may enter the property to determine if the person responsible is complying with this section. The FAHJ may issue an order to the person responsible for maintaining the defensible space directing the person to modify or remove non-fire resistant vegetation from defensible space areas, remove leaves, needles and other dead vegetative material from the roof of a building or structure, maintain trees as required by section 4907.3.1 or to take other action the FAHJ determines is necessary to comply with the intent of sections 4903 et seq.

Sec. 4907.3.1 Trees. Crowns of mature trees located within defensible space shall maintain a minimum horizontal clearance of 10 feet for fire resistant trees and 30 feet for non-fire resistive trees. Mature trees shall be pruned to remove limbs to maintain a vertical separation of three times the height of the lower vegetation or 6 feet, whichever is less, above the ground surface adjacent to the trees. Dead wood and litter shall be regularly removed from trees. Ornamental trees shall be limited to groupings of 2-3 trees with canopies for each grouping separated horizontally as described in Table 4907.3.1.

TABLE 4907.3.1
DISTANCE BETWEEN TREE CANOPIES

Distance between Tree Canopies by Percent Slope	
Percent of Slope	**Required Distances Between Edge of Mature Tree Canopies (1)**
0 to 20	**10 feet**
21 to 40	**20 feet**
41 plus	**30 feet**

1. Determined from canopy dimensions as described in Sunset Western Garden Book (Current Edition)

SEC. 96.1.5601.2. EXPLOSIVES AND FIREWORKS-APPLICABILITY.

Section 5601.2 is added to the California Fire Code to read:

Sec. 5601.2 Applicability. This section shall apply to the manufacture, possession, storage, sale, transportation and use of explosives and blasting agents and to any blasting operation in the unincorporated area of the County. The Sheriff is the Issuing Officer for purposes of this section. The Sheriff may delegate the duties of Issuing Officer at her or his discretion. Additionally, as may be appropriate based on circumstances, the Issuing Officer may enter into memoranda of agreement with non-County fire agencies whereby such non-County agency will assume the duties of issuing a permit or permits required by this Chapter. The Issuing Officer shall determine whether a blast is a major blast or a minor blast under this section. A minor blast is subject to all conditions of this section except the inspection requirements.

Sec. 5601.2.1 Definitions. The following terms are defined in section 202:

BLASTER.
BLASTING AGENT.
BLASTING OPERATION.
BLASTING PERMIT.
BLAST SITE.
EXPLOSIVES PERMIT.
INSPECTOR.
MAJOR BLASTING.
MINOR BLASTING.

Sec. 5601.2.2. Application. Application for a permit required by this section shall be in the form required by the Issuing Officer.

S**ec. 5601.2.3 Permit requirements.** No person shall conduct blasting in the unincorporated area of the County without an explosives permit issued under this chapter. A person applying for an explosives permit shall, in addition to demonstrating compliance with fire safety requirements, shall also comply with all County requirements for any building permits, grading permits, use permits, encroachment permits and all other entitlements to use property, including zoning requirements and any determination under the Zoning Ordinance of nonconforming status. The applicant shall be responsible for providing proof of all necessary approvals when requested by the Issuing Officer.

Sec. 5601.2.4 Permit conditions. The Issuing Officer may impose conditions and procedures as are deemed reasonably necessary to protect the public health and safety based upon the facts and circumstances of a particular blasting operation. The permit

conditions shall be in writing. Failure to comply with any permit condition is grounds for revocation of the permit. A blaster may request the Issuing Officer release the blaster from any permit condition if circumstances have changed that make the condition no longer applicable. In addition to complying with the County blasting regulations, a blaster shall also comply with blasting regulations of neighboring jurisdictions, for any blasting operations outside of the unincorporated area of the County conducted in conjunction with a project within the unincorporated areas of the County.

Sec. 5601.2.5 Insurance and indemnification required. As an additional condition for obtain an explosives permit the applicant shall submit: (1) a certificate of insurance evidencing that the blaster has obtained a general liability insurance policy which includes coverage for explosion, collapse and underground property damage from an insurer satisfactory to the Issuing Officer, that is in effect for the period covered by the permit, written on an "occurrence" basis, in an amount of not less than $500,000 per each occurrence, naming the County and the FAHJ as an additional insured and providing that the policy will not be canceled or terminated without 30 days prior written notice to the County and (2) an agreement signed by the blaster agreeing to defend, indemnify and hold the County and its agents, officers and employees harmless from any claims or actions arising from the issuance of the permit or any blasting activity conducted under the permit.

Sec. 5601.2.6 Blasting hours. Blasting shall only be allowed Monday through Saturday, between the hours of 7:00 a.m. and 6:00 p.m. or ½ hour before sunset, whichever occurs first, unless special circumstances warrant another time or day and the Issuing Officer grants approval of the change in time or day.

Sec. 5601.2.7 Additional operational requirements. The owner of any property in the unincorporated area of the County on which any blasting is intended to occur, shall give, or cause to be given, a one-time notice in writing, for any proposed blasting to the local fire agency and dispatch center and to all residences, including mobilehomes, and businesses within 600 feet of any potential major blast location or 300 feet from any potential minor blast location. The notice shall be given not less than 24 hours, but not more than one week, before a blasting operation and shall be in a form approved by the Issuing Officer. The minimum 24-hour notice requirement may be reduced to a lesser period but not less than one hour if the Issuing Officer determines that special circumstances warrant the reduction in time. Adequate precautions shall be taken to reasonably safeguard persons and property before, during and after blasting operations. These precautions shall include:

1. The blaster shall retain an inspector to inspect all structures, including mobilehomes, within 300 feet of the blast site before blasting operations, unless inspection is waived by the owner and/or occupant. The inspector shall obtain permission of the owner and/or occupant before conducting the inspection. The

inspection shall be only for the purpose of determining the existence of any visible or reasonably recognizable preexisting defects or damages in any structure. Waiver of inspection shall be in writing signed by the owner and/or occupant. Refusal to allow inspection shall also constitute a waiver. The inspector shall notify the owner and/or occupant of the consequences of refusing an inspection shall include a refusal in the summary report filed with the Issuing Officer. The blaster shall request an inspector conduct post-blast inspections upon receipt of a written complaint of property damage if the complaint is made within 60 days of completion of blasting operations. If the blaster has knowledge of alleged property damage independent of the written complaint, the blaster shall also retain an inspector to conduct a post-blast inspection.

2. An inspector shall complete and sign pre-blast inspection reports identifying all findings and inspection waivers. The blaster shall retain the inspection reports for three years from the date of the blasting and upon a complaint of alleged damage the blaster shall immediately file a copy of the report with the Issuing Officer and provide a copy to the complainant. If there is a change in the blasting contractor after blasting has commenced on a project, a re-inspection shall be conducted in accordance with the preceding paragraph before the new blasting contractor undertakes any additional blasting.

3. The blaster shall retain an inspector to conduct a post-blast inspection of any structure for which a written complaint alleging blast damage has been received. A written report of the inspection shall be immediately filed with the Issuing Officer and provided to any person who made a complaint for damages.

4. The blaster shall allow any representative of the Issuing Officer to inspect the blast site and blast materials or explosives at any reasonable time.

5. If the blaster wants a representative of the Issuing Officer to witness a blasting operation the blaster shall make a request with the Issuing Officer at least 12 hours before the blast. The blaster shall confirm the request for a witness with the Issuing Officer at least one hour before the blast. The blaster shall be responsible for any cost incurred by the Issuing Officer in having a representative witness the blast.

6. The blaster shall notify the Issuing Officer on the day of a scheduled blasting operation not less than one hour before blasting.

7. All major blasting operations shall be monitored by an approved seismograph located at the nearest structure within 600 feet of the blasting operation. All daily seismograph reports shall be maintained by the blaster for three years from the blasting.

Sec. 5601.2.8 Seizure of illegal items. The Issuing Officer may seize at the owner's expense, all explosives, ammunition or blasting agents, which are illegally manufactured, sold, offered or exposed for sale, delivered, stored, possessed or transported in violation of this chapter.

Sec. 5601.2.9 Violations for false or misleading information. It shall be unlawful and a violation of this chapter for any person to provide false or misleading information or documentation to the County or any of its officers or employees or to any fire department, fire protection district, fire company or legally formed volunteer fire department, or its officers or employees in the unincorporated area of the County, having jurisdiction over any aspect of the explosives or blasting permit process or blasting operations.

Sec. 5601.2.10 Fees. A person applying to the Issuing Officer to be approved as a blaster or inspector, as defined in this section, shall pay an application fee to the Issuing Officer. A person applying for an explosives permit under this section shall pay the fee established by the Issuing Officer with the application. The amount of any fee required by this chapter shall be determined by the Issuing Officer on the basis of the full costs involved in processing an application.

SEC. 96.1.5608.1. FIREWORKS DISPLAY.

Section 5608.1 of the California Fire Code is revised to read:

Sec. 5608.1 General. Outdoor fireworks displays, use of pyrotechnics before a proximate audience and pyrotechnic special effects in motion picture, television, theatrical and group entertainment productions shall comply with California Code of Regulations, Title 19, Chapter 6 and County Code sections 32.101 et seq. The Fire Warden is the Issuing Officer for any fireworks permit required by this Chapter. The Fire Warden may delegate the duties of Issuing Officer at her or his discretion. Additionally, as may be appropriate based on circumstances, the Issuing Officer may enter into memoranda of agreement with non-County fire agencies whereby such non-County agency will assume the duties of issuing a permit or permits required by this Chapter.

Sec. 5608.1.1 Scope. The possession, manufacture, sale, storage, use and display of fireworks are prohibited in the unincorporated area of the County except as provided in County Code sections 32.101 et seq.

SEC. 96.1.5705.2.4. TRANSFERRING CLASS I, II OR III LIQUIDS.

Section 5705.2.4 of the California Fire Code is revised to read:

Sec. 5705.2.4 Transferring Class I, II or III liquids. Class I or II liquids or Class III liquids that are heated up to or above their flash points shall be transferred by one of the following methods:

1. From safety cans complying with UL 30.

2. Through an approved closed piping system.

3. From containers or tanks by an approved pump taking suction through an opening in the top of the container or tank.

4. Approved engineered liquid transfer system.

Exception: Liquids in containers not exceeding a 5.3-gallon (20 L) capacity.

SEC. 96.1.5706.2.5.2.. TANKS FOR GRAVITY DISCHARGE.

Section 5706.2.5.2.1 of the California Fire Code is added to read:

Sec. 5706.2.5.2.1 Limitations on tanks for gravity discharge. Gravity dispensing of Class I or II liquids or Class III liquids that are heated up to or above their flash points is prohibited. Dispensing devices for flammable and combustible liquids shall be of an approved type. Approved pumps taking suction from the top of the tank shall be used. Flammable or combustible liquids shall not be dispensed by a device that operates through pressure within a storage tank. Air or oxygen shall not be used to pressurize an aboveground tank.

SEC. 96.1.5706.2.8.2 PROHIBITION ON USE OF TANK VEHICLE.

Section 5706.2.8.2 is added to the California Fire Code to read:

Sec. 5706.2.8.2. Tank vehicle as a substitute for permanent tank prohibited. The use of a tank vehicle in a stationary manner as a substitute for an approved above-ground or below-ground fuel tank is prohibited.

SEC. 96.1.6107.5. SAFETY PRECAUTIONS AND DEVICES-SECURING LPG TANKS.

Section 6107.5 is added to the California Fire Code to read:

Sec. 6107.5 Securing LPG tanks. When required by the FAHJ, LPG tanks shall be secured to prevent the tank from rolling or moving.

SEC. 96.1.8001. REFERENCED STANDARDS.

Section 8001 is added to the California Fire Code to read:

Sec. 8001. Referenced standard NPPA 13D. Amended sections as follows:

Revise 5.1.1.1 to read as follows:

5.1.1.1 Spare sprinkler heads. Spare fire sprinkler heads (one of each type or as approved by the FAHJ) wrench, operation and maintenance instructions shall be provided in the vicinity of the riser.

Add a new 7.1.5 to read as follows:

7.1.5 Pressure-regulating valve. When available system water pressure exceeds 150 psi, a pressure-regulating valve acceptable to the FAHJ shall be installed before the system riser. Such valves shall be adjusted to restrict the outlet pressure to a maximum of 150 psi at any flow or no flow. When such valves are installed submittal documents must include manufacturer information sheets along with charts showing the dimensions (size) and flow characteristics inlet and outlet pressures at various flows for the type of valve being installed, and the valve shall be included in the design calculations.

Exception: At the discretion of the FAHJ the contractor may install an acceptable pressure relief valve, piped to the system main drain, set to relieve the pressure at 175 psi, provided the available supply pressure does not exceed 175 psi.

Add a new 7.3.3 to read as follows:

7.3.3 Pressure gauge. An approved 300 psi pressure gauge shall be permanently installed at the riser.

Revise 7.6 to read as follows:

7.6 Alarms. A water flow switch shall be provided and located on the sprinkler riser above the check valve and main drain and shall actuate an audible fire alarm signal bell. The water flow switch shall be a retarding type with a delay between 15-60 seconds before activation of the signal bell. Alarm bell shall have a minimum diameter of 8 inches and be mounted on the exterior in the vicinity of the master bedroom. The alarm bell shall be clearly audible in all bedrooms with intervening doors closed.

Revise 8.3.2 to read as follows:

8.3.2. Sprinklers are not required in bathrooms where the area does not exceed 55 sq. ft. unless there is door exiting directly to the outside, and the walls and ceilings including behind fixtures, are of noncombustible or limited combustible materials providing a fifteen-minute thermal barrier.

Revise 8.3.4 to read as follows:

8.3.4. Sprinklers may be omitted from carports and open attached porches. However, attached garages shall be protected with intermediate temperature rated sprinklers. Sprinkler heads in garages shall be protected against mechanical damage by approved guards, unless recessed heads are provided. Garage doors may be disregarded in the layout of the fire sprinkler system.

Revise 8.3.5.1.1 to read as follows:

8.5.1.1. Where the fuel-fired equipment is above all of the occupied areas of the dwelling unit, at least one quick-response intermediate temperature sprinkler shall be installed above the equipment.

Add a new 10.2.4.1 to read as follows:

10.2.4.1 3-Head Calculation. When design conditions exceed the allowances of sec. 10.2, a 3-head calculation may be required by the FAHJ.

Add a new 10.2.5 to read as follows:

10.2.5 Pressure Cushion. The system shall be designed 10% below available water source pressure during peak usage.

Revise 11.2.1.1 to read as follows:

11.2.1.1 Hydrostatic Tests. Where a fire department connection is not provided, the system shall be hydrostatically tested at 200 psi. Manufactured or mobile homes shall be tested at 100 psi or as specified on the manufacturer's nameplate.

Add a new 12.3.3 to read as follows:

12.3.3 Systems out of service. When sprinkler systems are shut-off or otherwise inoperative for periods greater than 48 hours for repair of service, the FAHJ must be notified immediately.

SEC. 96.1.APP.B103.3. AREAS WITHOUT WATER SUPPLY SYSTEMS.

Appendix B, section B103.3 of the California Fire Code is revised to read:

B103.3 Areas without water supply systems. For information regarding water supplies for fire-fighting purposes in rural areas and suburban areas in which adequate and reliable water supplies do not exist, the fire code official is authorized to utilize NFPA 1142 or the standard published by the Insurance Services Office document entitled "Guide for Determination of Required Fire Flow."

SEC. 96.1.APP.H100 REPORTING FORMS

Appendix H, sec. H100 is added to the California Fire Code to read:

SECTION H100
REPORTING FORMS

H100.1 Reporting forms. Hazardous Materials reporting forms currently adopted by San Diego County Department of Environmental Health Hazardous Materials Management Unit which cover the same areas as forms contained in this Appendix are adopted by reference and take precedence over this Appendix.

SEC. 96.1.007 EFFECTIVE DATE OF COUNTY FIRE CODE

The express findings in support of the modifications and changes made to the provisions of the California Fire Code incorporated by this Chapter will be filed with the California Building Standards Commission pursuant to California Health & Safety Code section 17958.7 as soon as practicable after passage by the Board of Supervisors. This Chapter shall then take effect on June 30, 2014, or thirty days after its passage, whichever comes later.

Section 2. Section 32.102 of Chapter 1, Division 2, Title 3 of the County Regulatory Code, currently reserved, will now read as follows:

SEC. 32.102 FIRE WARDEN IS THE ISSUING OFFICER

The County of San Diego Fire Warden is the Issuing Officer for any permit required by this Chapter. The Fire Warden may delegate the duties of Issuing Officer at her or his discretion. Additionally, as may be appropriate based on circumstances, the Issuing Officer may enter into memoranda of agreement with non-County fire agencies whereby such non-County agency will assume the duties of issuing a permit or permits required by this Chapter.

Section 3. Section 32.104 of Chapter 1, Division 2, Title 3 of the County Regulatory Code is amended to read as follows:

Sec. 32.104 PERMITS REQUIRED FOR MANUFACTURE, POSSESSION, SALE AND DISCHARGE OF FIREWORKS.

(a) It shall be unlawful for any person to manufacture, possess, sell or distribute fireworks in the unincorporated area of the County without a permit issued by the Issuing Officer.

(b) An application for a permit to manufacture, possess, or sell fireworks shall be submitted on a form provided by the Issuing Officer and accompanied by the fee required in section 21.1901. The permit shall expire one year from the date it is issued and may be renewable.

(c) A person to whom a permit has been issued under this Chapter may apply for a public display permit by submitting an application to the Issuing Officer at least 30 days before the event for which a permit is requested. No person shall be granted a public display permit unless the display will be handled by or under the supervision of a State licensed pyrotechnic operator. A public display permit shall only be valid for a single event.

Section 4. Effective Dates

This ordinance shall take effect and be in force thirty days after its passage, and before the expiration of fifteen days after its passage a summary hereof shall be published once with the names of the members of this Board voting for and against it in the San Diego Commerce, a newspaper of general circulation published in the County of San Diego. The County Fire Code set forth in Section 1 of this Ordinance shall be effective as more specifically set forth in Section 96.1.007 of the County Fire Code.

Approved as to Form and Legality
THOMAS E. MONTGOMERY, County Counsel
By William L. Pettingill, Senior Deputy County Counsel

PASSED, APPROVED, AND ADOPTED by the Board of Supervisors of the County of San Diego this 21st day of October, 2014.

DIANNE JACOB
Chairwoman, Board of Supervisors
County of San Diego, State of California

The above Ordinance was adopted by the following vote:

AYES: Cox, Jacob, D. Roberts, R. Roberts, Horn

ATTEST my hand and the seal of the Board of Supervisors this 21st day of October, 2014.

THOMAS J. PASTUSZKA
Clerk of the Board of Supervisors

By _____
Christina Gomez, Deputy

Ordinance No. 10356 (N.S.)

10/21/14 (4)

COUNTY OF SAN DIEGO

2014

CONSOLIDATED FIRE CODE

5th Edition

This Consolidated Fire Code includes the County amendments to the 2013 California Fire Code and the ordinances of the 16 unincorporated County fire protection districts.

Effective November 20, 2014

ORDINANCE NO. 10357 (N.S.)

AN ORDINANCE RATIFYING THE 2014 CONSOLIDATED FIRE CODE FOR THE 16 FIRE PROTECTION DISTRICTS IN SAN DIEGO COUNTY

The Board of Supervisors of the County of San Diego ordain as follows:

Section 1. California Health and Safety Code (H & S Code) section 13869.7 (a) provides that a fire protection district organized pursuant to Part 2.7 (commencing with section 13800) of Division 12 of the H & S Code, may adopt building standards relating to fire and panic safety that are more stringent than the building standard adopted by the State Fire Marshal and contained in the California Building Standards Code. H & S Code section 13869.7(c) requires a fire protection district to transmit its adopted ordinance to the county where the ordinance will apply and allows the legislative body of a county to ratify, modify or deny an adopted fire protection district ordinance. The fire protection districts within the boundaries of San Diego County have collaborated to adopt by an ordinance for each district, the 2013 California Fire Code. The 2014 Consolidated Fire Code is based upon the County's 2014 Fire Code as currently amended and adopted in Title 9, Division 6, Chapter 1 of the County Code, subject to the modifications of each fire protection district to the Building Standards Code based upon their respective determinations as to what modifications are reasonably necessary because of local climatic, geological and topographical conditions within the district.

Section 2: The County of San Diego ratifies the 2014 Consolidated Fire Code to read as follows:

2014 CONSOLIDATED FIRE CODE FOR THE 16 FIRE PROTECTION DISTRICTS IN SAN DIEGO COUNTY

SEC. 1.001. APPLICATION OF THE CONSOLIDATED FIRE CODE.

This code contains the ordinances of each of the 16 fire protection districts shown in the box below. There is an index at the end of the code which contains a section by section explanation of any differences between this code and the County Fire Code.

Fire Districts

Alpine	**Ramona**
Bonita-Sunnyside	**Rancho Santa Fe**
Borrego Springs	**Rincon Del Diablo**
Deer Springs	**San Diego Rural**
Julian-Cuyamaca	**San Marcos**
Lakeside	**San Miguel**
North County	**Valley Center**
Pine Valley	**Vista**

SEC. 1.002. EXPLANATION OF THE 2014 CONSOLIDATED FIRE CODE.

(a) This code is based upon the County Fire Code contained in Title 9, Division 6, Chapter 1, of the San Diego County Code. The fire protection districts adopt the County Fire Code subject to the modifications or changes that are reflected in the gray boxes in this code. The gray boxes identify modifications or changes to the County Fire Code adopted by one or more fire protection district which each adopting district has determined is necessary because of local climatic, geological or topographical conditions that exist in the district. Minor changes in the County Code administrative provisions are not identified in gray boxes, e.g. where a provision refers to a Fire District Board of Directors rather than the County Board of Supervisors, because the change does not reflect a change in policy or application of the County Fire Code. The index at the end of this code identifies these minor changes in administrative provisions with designation "Jurisdictional Difference" (JD).

(b) The digits "96.1" in the section numbers of this code refer to Title 9, Division 6, Chapter 1, of the County Code. The digits that follow "96.1," with the exception of the

introductory provisions, correspond as closely as possible to the California Fire Code contained in California Building Standards Code.

SEC. 96.1.001. ADOPTION OF COUNTY AMENDMENTS TO THE CALIFORNIA FIRE CODE.

Every three years the State of California repeals, revises and republishes the California Building Standards Code ("CBSC") in its entirety and in doing so adopts and publishes amendments to the included California Fire Code (California Code of Regulations, Title 24, Part 9). Pursuant to California Health & Safety Code section17958, the CBSC and its California Fire Code become effective in the County of San Diego 180 days after publication. California Health and Safety Code sections 17922, 17958, 17958.5 and 17958.7 provide that the County may adopt the California Fire Code by reference as the County's own fire code and make such changes or modifications that the Board of Supervisors expressly finds are reasonably necessary because of local climatic, geological or topographical conditions. In this chapter, the County adopts modifications and changes to the Fire Code portion of the CBSC that are reasonably necessary because of the County's climatic, geological and topographical conditions.

The County adopts as the County Fire Code, for the unincorporated area of the County, the following: (1) The 2013 California Fire Code portion of the CBSC, including the appendix to Chapter 4 and appendices B, H, I, & K; (2) the 2012 International Fire Code (IFC) and the National Fire Protection Association Standards 13, 13-R & 13-D, 2013 Editions; and (3) the County's amendments in this chapter.

To determine which of these codes governs in any particular case, code amendments adopted by the State of California shall take precedence over the 2012 IFC, and the 2012 IFC shall be used for those code sections not adopted by the State. Amendments the County adopts shall take precedence over both the 2012 IFC and 2013 California Fire Code provisions. Where this Chapter states that a provision of the California Fire Code is revised, amended, changed, deleted, added or otherwise modified, that means revised, amended, changed, deleted, added or otherwise modified as it is incorporated into this Chapter.

This County Fire Code is adopted for the protection of the public health and safety and applies to both ministerial and discretionary projects. It includes definitions, requirements for permits and inspection for installing or altering systems, regulations for the erection, construction, enlargement, alteration, repair, moving, removal, conversion, demolition, equipment use and maintenance of buildings, structures and premises, including the installation, alteration or repair of new and existing fire protection systems and their inspection and provides penalties for violation of this code. It shall apply to all new construction and to any alterations, repairs, or reconstruction, except as otherwise provided for in this chapter.

Nothing in this chapter shall interfere with or impede the authority of the final decision maker authorized to approve, conditionally approve or deny discretionary projects.

AMENDMENT TO SECTION 96.1.001.

Each of the fire protection districts to which this consolidated fire code applies adopt the following code amendment:

Section 1. That the Board of Directors of the (insert fire district's name) adopts as the Fire Code for the (insert fire district's name) the following: the 2013 California Fire Code, including the appendix to Chapter 4 and appendices B, H, I & K the 2012 International Fire Code (IFC), and the National Fire Protection Association Standards 13, 13-R & 13-D, 2013 Editions, together with the District's amendments in this ordinance. This Fire Code is adopted for the protection of the public health and safety. It includes definitions, provisions for the safeguarding of life and property from fire and explosion hazards arising from the storage, handling and use of hazardous substances, materials and devices, and from conditions hazardous to life or property in the occupancy of buildings, requirements for permits and inspection for installing or altering systems, regulations for the erection, construction, enlargement, alteration, repair, moving, removal, conversion, demolition, equipment use and maintenance of buildings and structures, including the installation, alteration or repair of new and existing fire protection systems and their inspection and provides penalties for violation of this code. Each and all of the regulations, provisions, penalties, conditions and terms of the (insert fire district's name) Fire Code on file in the office of the (insert fire district's name) are hereby referred to, adopted, and made a part hereof, as if fully set out in this ordinance.

SEC. 96.1.002. CALIFORNIA FIRE CODE.

The "California Fire Code" means the 2013 Fire Code portion of the CBSC, including the appendix to Chapter 4 and appendices B, F, H & K and the IFC (2012 edition).

SEC. 96.1.003. COUNTY FIRE CODE.

References to "this chapter" shall mean the County Fire Code. References to a section number not proceeded by the prefix "96.1," which stands for the title, division and chapter respectively of a section in this chapter, shall refer to the California Fire Code.

SEC. 96.1.004. RESPONSIBILITY FOR ENFORCEMENT.

(a) The County Fire Warden or authorized representative shall be responsible for ensuring County enforcement of Chapter 56 of the California Fire Code as adopted by

and incorporated in the County Fire Code insofar as it pertains to fireworks and pyrotechnics and California Code of Regulations, Title 19, Division 1, Chapter 6. The Sheriff shall be responsible for enforcement of Chapter 56 of the California Fire Code as adopted and incorporated in the County Fire Code insofar as it pertains to explosives and California Code of Regulations, Title 19, Division 1, Chapter 10.

(b) All other portions of the County Fire Code shall be enforced as follows:

(1) By the Fire Warden or his/her duly authorized representative of the San Diego County Fire Authority in all unincorporated areas of the County which are outside a fire protection district.

(2) For areas in a fire protection district, by the district fire chief or his/her duly authorized representative.

SEC. 96.1.005. GEOGRAPHIC LIMITS.

The geographic limits referred to in certain sections of the 2013 California Fire Code are established as follows:

(a) **Sec. 5704.2.9.6.1.** The geographic limits in which the storage of Class I and Class II liquids in above-ground tanks outside of buildings is prohibited: the unincorporated area of the County of San Diego.

Exceptions:

1. In areas zoned for mixed, general or high impact industrial uses.

2. Crankcase draining may be stored in specially constructed above-ground storage tanks, approved by the fire code official, with a maximum capacity of 550 gallons. These tanks may be located within a building when the fire code official deems appropriate and the container meets U.L. Standard 2085. Containers shall be installed and used in accordance with their listing and provisions shall be made for leak and spill containment. In no case shall storage be allowed on residential or institutional property.

3. With the fire code official's approval, Class I and II liquids may be stored above ground outside of buildings in specially designed, approved and listed containers which have features incorporated into their design which mitigate concerns for exposure to heat, ignition sources and mechanical damage. Containers shall be installed and used in accordance with their listing, and provisions shall be made for leak and spill containment. The fire code official may disapprove the installation of these containers when in his or her opinion their use presents a risk to life or property.

(b) **Sec. 5706.2.4.4**. The geographic limits in which the storage of Class I and Class II liquids in above-ground tanks is prohibited: the unincorporated area of the County of San Diego.

Exceptions:

1. In areas zoned for other than residential uses, when approved by the FAHJ.

2. Crankcase draining may be stored in specially constructed above-ground storage tanks, approved by the fire code official, with a maximum capacity of 550 gallons. These tanks may be located within a building when the fire code official deems appropriate and the container meets U.L. Standard 2085. Containers shall be installed and used in accordance with their listing, and provisions shall be made for leak and spill containment. In no case shall storage be allowed in residential or institutional property.

3. With the fire code official's approval, Class I and II liquids may be stored above ground in specially designed, approved and listed containers which meet U.L. Standard 2085. Containers shall be installed and used in accordance with their listing, and provisions shall be made for leak and spill containment. The fire code official may disapprove the installation of such containers when in his opinion their use presents a risk to life or property.

(c) **Sec. 5806.2.** The geographic limits in which the storage of flammable cryogenic fluids in stationary containers is prohibited: the unincorporated area of the County of San Diego, except for areas zoned for mixed, general or high impact industrial uses.

(d) **Sec. 6104.2.** The geographic limits in which the bulk storage of liquefied petroleum gas is prohibited for the protection of heavily populated and congested areas: the unincorporated area of the County of San Diego, except for areas zoned for mixed, general or high impact industrial uses.

Exception: Bulk tanks with a maximum aggregate capacity of 30,000 gallons water capacity for above-ground storage of underground distribution to residential areas, where the storage and distribution meets County Fire Code requirements as determined by the FAHJ.

SEC. 96.1.006. DELETIONS, REVISIONS, ADDITIONS AND NUMERICAL EXPLANATION.

When deletions, revisions and additions are made in this chapter to the California Fire Code, the digits following the first three digits of the section numbers in this chapter refer to conform to the numbering system of the California Fire Code: e.g., SEC. 96.1.307.5 refers to Chapter 3 section 307.5 of the California Fire Code. When deletions, revisions

and additions are made to an appendix of the California Fire Code, "APP" is added to the number: e.g., section SEC. 96.1.APP.B103.3 refers to Appendix Chapter B, section 103.3 of the California Fire Code.

SEC. 96.1.101.5. VALIDITY.

Section 101.5 of the California Fire Code is revised to read:

Sec. 101.5 Validity. The Board of Supervisors declares that should any section, paragraph, sentence or word of this chapter be declared invalid for any reason it is the intent of this Board that it would have passed all other portions of this chapter independently of any portion that may be declared invalid.

AMENDMENT TO SECTION 102.1.1.

The Vista Fire Protection District adopts the following code amendment:

Sec. 102.1.1 Reconstruction. If the value of the reconstruction (or renovations) of a building is equal to or exceeds 75% of the value of the building, the entire building shall comply with the latest adopted code provisions for new construction. The value of the reconstruction (or renovation) for a property shall include the value of all construction stemming from construction related permits issued within the last two years. Values shall be based on current City of Vista building permit fee valuation multipliers.

SEC. 96.1.102.13. REPEAL OF CONFLICTING ORDINANCES, RESOLUTIONS OR MOTIONS.

Section 102.13 is added to the California Fire Code to read:

Sec. 102.13 Repeal of conflicting ordinances, resolutions or motions. All former ordinances, resolutions or motions or parts thereof, conflicting or inconsistent with the provisions of this chapter are repealed.

SEC. 96.1.104.1. GENERAL AUTHORITY AND RESPONSIBILITIES

Section 104.1 of the California Fire Code is revised to read:

Sec. 104.1 General authority and responsibilities. The fire code official is hereby authorized to enforce the provisions of this code and shall have the authority to render interpretations of this code, and to adopt policies, procedures, rules and regulations in order to clarify the application of its provisions. Such interpretations, policies,

procedures, rules and regulations shall be in compliance with the intent and purpose of this code and shall not have the effect of waiving requirements specifically provided for in this code. The fire code official may consult with other fire professionals and experts in the interpretation and application of this code.

SEC. 96.1.104.8. MODIFICATIONS.

Section 104.8 of the California Fire Code is revised to read:

Sec. 104.8 Modifications. Whenever there are practical difficulties involved in carrying out the provisions of this code, the fire code official shall have the authority to grant modifications for individual cases, provided the fire code official shall first find that special individual reasons make the strict letter of this code impracticable and the modification is in compliance with the intent and purpose of this code and that such modification does not lessen health, life and fire safety requirements. The applicant's request for a modification shall state the specific sections(s) for which a modification is requested, material facts supporting the contention of the applicant, the details of the modification or mitigating measure proposed and, if applicable, a map showing the proposed location and siting of the modification or mitigation measure. The details of action granting modifications shall be recorded and entered into the files of the department of fire prevention.

SEC. 96.1.104.12. COST RECOVERY.

Section 104.12 is added to the California Fire Code to read:

Sec. 104.12 Cost recovery. The purpose of this section is to establish authority to obtain reimbursement from responsible individuals for the expenses of any emergency response and/or enforcement action by the fire department to protect the public from criminal or negligible activities, and from fire or hazardous substances.

Sec. 104.12.1 Reimbursement required. In accordance with the Health and Safety Code section 13000 et seq., an individual who acts negligently or in violation of the law and thereby requires the jurisdiction to provide an emergency response to a danger posed by a fire or hazardous substance shall be liable for reimbursement to the agency for the costs incurred. In accordance with Government Code sections 53150 through 53158, any individual who is under the influence of an alcoholic beverage or any drug or the combined influence of an alcoholic beverage or any drug, and whose negligent operation of a motor vehicle, boat or vessel or civil aircraft caused by that influence proximately causes any incident and thereby requires the agency to provide an emergency response shall reimburse the agency for the cost incurred.

SEC. 96.1.105.3.9. EXPENSE RECOVERY.

Section 105.3.9 is added to the California Fire Code to read:

Sec. 105.3.9 Expense recovery. The fire code official may impose a fee for recovery of expenses incurred to enforce the fire prevention provisions of this code.

SEC. 96.1.105.6.5.1. CHRISTMAS TREE LOTS.

Section 105.6.5.1 is added to the California Fire Code to read:

Sec. 105.6.5.1 Christmas tree lots. An operational permit is required to operate a Christmas tree lot, with or without flame proofing services.

SEC. 96.1.105.6.19.1. GREENWASTE RECYCLING, MULCHING, COMPOSTING OPERATIONS AND STORAGE.

Section 105.6.19.1 is added to the California Fire Code to read:

Sec. 105.6.19.1 Greenwaste recycling, mulching, composting operations and storage. An operational permit is required for greenwaste recycling, mulching, composting operations and storage.

SEC. 96.1.105.8. NEW MATERIALS, PROCESSES OR OCCUPANCIES WHICH REQUIRE PERMITS.

Section 105.8 is added to the California Fire Code to read:

Sec. 105.8 New materials, processes or occupancies which require permits. The fire code official may determine, after allowing affected persons an opportunity to be heard, that a material, process or occupancy, not listed in this code shall require a permit, in addition to those now enumerated in this code. In that case, the fire code official shall prepare a list of any additional material, process or occupancy that shall require a permit and post the list in a conspicuous place in the offices of the fire authority having jurisdiction. Any interested person may obtain a copy of the list.

SEC. 96.1.108. APPEALS.

Section 108 of the California Fire Code is revised to read:

Sec. 108.1 Regional Fire Appeals Board established. In order to hear and decide appeals of orders, decisions or determinations made by the fire code official relative to the application and interpretation of this code, including the granting or denial of

modifications, there shall be and is hereby created the Regional Fire Appeals Board (Appeals Board). The Appeals Board shall adopt rules of procedure for conducting its business, and shall render all decisions and findings in writing to the appellant with a duplicate copy to the fire code official. A copy shall also be sent to the Building Official or other decision maker for the project, whichever is appropriate.

Sec. 108.2 Limitations on authority. An application for appeal shall be based on a claim that the intent of this code or the rules legally adopted hereunder have been incorrectly interpreted, the provisions of this code do not fully apply, or an equivalent method of protection or safety is proposed. The Appeals Board shall have no authority to waive requirements of this code.

Sec. 108.3 Qualifications. The Appeals Board shall consist of members who are qualified by experience and training to pass on matters pertaining to hazards of fire, explosions, hazardous conditions or fire protection systems and are not employees of the jurisdiction.

Sec. 108.4 Appeals procedures. This section establishes appeal procedures of an order, decision or determination (collectively, "determination") made by the fire code official, including the granting or denial of appeals.

Sec. 108.4.1 Appeals of determinations regarding building permits. The County, fire agency or project applicant may appeal a determination made by the fire code official related to a project for which a building permit is required by filing an appeal in writing with the Appeals Board within 30 days of the fire code official's final determination. The Appeals Board shall make factual findings and issue a written recommendation to the County Building Official on whether the fire code official's determination should be upheld, overruled or modified. The Building Official may not waive the requirements of this code, except as authorized by the code and is subject to the same requirements and restrictions in the code that applied to the fire code official. A copy of the recommendation shall be provided to the applicant. The County Building Official shall act on the Appeals Board's recommendation and issue a written decision to the parties within 15 days of receipt of the Appeals Board's recommendation. The Building Official's decision shall be final.

Sec. 108.4.2 Appeals of determinations regarding discretionary permits. The County, the fire agency or the project applicant may seek review of the fire code official's determination by the Appeals Board by filing a request for review with the Appeals Board within 30 days of the fire code official's determination. When reviewing a fire code official's determination pursuant to this subsection, the Appeals Board shall act in an advisory capacity. The Appeals Board shall review the fire code official's determination and make a recommendation to uphold, overrule or modify the fire code official's determination. The Appeals Board shall render its recommendation to the

County decision maker or decision-making body for consideration with the application for the discretionary permit.

Sec. 108.4.3 Appeals of determinations for matters other than building permits or discretionary permits.

(a) **Areas outside a fire protection district.** Any affected party may appeal a determination made by the fire code official regarding a matter for which a building permit or discretionary permit is not required by filing an appeal in writing with the Appeals Board within 30 days of the fire code official's final determination. The Appeals Board shall review the fire code official's determination and make a recommendation to uphold, overrule or modify the fire code official's determination. The Appeals Board's determination shall be final.

(b) **Areas inside a fire protection district.** Any affected party may appeal a determination made by the fire code official regarding a matter for which a building permit or discretionary permit is not required by filing an appeal in writing with the fire protection district's Board of Directors within 30 days of the fire code official's final determination. The Board of Directors shall review the fire code official's determination and make a recommendation to uphold, overrule or modify the fire code official's determination. The Board of Director's determination shall be final.

Sec. 108.5 Regional Fire Appeals Board.

(a) The Appeals Board members shall consist of the following:

- Two representatives from the San Diego County Fire Districts Association.
- Two chief officers from CAL FIRE.
- One fire marshal from the unincorporated area of the County.

(b) The Appeals Board shall not include a representative from the agency whose fire code official made the determination that is being appealed. An alternate for the regular member(s) of the Appeals Board shall be designated to serve in this situation.

(c) Three members shall constitute a quorum for the transaction of business, and three affirmative votes shall be necessary to render a recommendation.

(d) If the Appeals Board recommends a modification to this code for an individual case, a copy of the recommendation and findings along with a map showing the

proposed modification and mitigating measures shall be forwarded to the Unit Chief of CAL FIRE, San Diego/Imperial Unit.

SEC. 96.1.109.4 VIOLATIONS, PENALTIES AND RESPONSIBILITY FOR COMPLIANCE.

Section 109.4 of the California Fire Code is revised to read:

Sec. 109.4 Violations, penalties and responsibility for compliance. It shall be unlawful for any person, as defined in section 12.115 of the County Code of Regulatory Ordinances, to use any property or erect, construct, enlarge, alter, repair, move, remove, improve, convert, demolish, equip, use, occupy or maintain any building or structure, or vacant land or cause the same to be done, contrary to or in violation of any of the provisions of this chapter. A property owner shall be considered to have allowed any use or improvement of property occupied by or under the dominion and control of the owner and shall be responsible for the discontinuance and removal of any violation of the County Fire Code. This responsibility shall include property leased to another person. A property owner shall also be responsible for the discontinuance and removal of any violation of the County Fire Code that existed on the property prior to the current owner's purchase of the property.

AMENDMENT TO SECTION 109.4.

The Alpine, Bonita-Sunnyside, Deer Springs, Lakeside, North County, Ramona, Rancho Santa Fe, Rincon Del Diablo, San Miguel, Valley Center and Vista Fire Protection Districts adopt the following code amendment:

Sec. 109.4 Violations, penalties and responsibility for compliance. Any person who shall violate any of the provisions of this code or standards hereby adopted or fail to comply therewith, or who shall violate or fail to comply with any order made there under, or who shall build in violation of any detailed statement or specification or plans submitted and approved there under, or any certificate or permit issued there under, and from which no appeal has been taken, or who shall fail to comply with such an order as affirmed or modified by the attorney for the (insert fire protection district) or by a court of competent jurisdiction within the time fixed herein, shall severally for each and every violation and noncompliance respectively, be guilty of a infraction or misdemeanor, punishable by a fine not exceeding $1,000.00 or by imprisonment in County Jail not exceeding six (6) months, or both. The imposition of one penalty of any violation shall not excuse the violation or permit it to continue; and all such persons shall be required to correct or remedy such violations or defects within a reasonable time; and when not otherwise specified, each day that prohibited conditions are maintained shall constitute a separate offense.

The application of the above penalty shall not be held to prevent the enforced removal of prohibited conditions.

AMENDMENT TO SECTION 111.4.

The Alpine, Bonita-Sunnyside, Deer Springs, Lakeside, North County, Ramona, Rancho Santa Fe, Rincon Del Diablo, San Miguel, Valley Center and Vista Fire Protection Districts adopt the following code amendment:

Sec. 111.4 Failure to comply. Any person who shall continue any work, having been served with a stop work order, except such work as that the person is directed to perform to remove a violation or unsafe condition, shall be liable to a fine of not less than $250.00 or more than $1,000.00.

SEC. 96.1.202. DEFINITIONS.

Section 202 of the California Fire Code is revised by adding or modifying the following definitions:

AERATED STATIC PILE. A composting process that uses an air distribution system to blow or draw air through the pile. Little or no pile agitation or turning is performed.

BLASTER. A person who has been approved by the Sheriff to conduct blasting operations and who has been placed on the list of approved blasters. The listing shall be valid for one year unless revoked by the Sheriff.

BLASTING AGENT. A material or mixture consisting of a fuel and oxidizer intended for blasting. The finished product as mixed and packaged for use or shipment shall not be detonated by means of a No. 8 test blasting cap when unconfined.

BLASTING OPERATION. The uses of an explosive device or explosive material to destroy, modify, obliterate or remove any obstruction of any kind.

BLASTING PERMIT. A permit issued by the Issuing Officer pursuant to section 105.6.14. The permit shall apply to a specific site and shall be valid for a period not to exceed one year.

BLAST SITE. The geographically defined area, as shown on a project map or plot plan, where a blaster is authorized by a blasting permit issued under this section to conduct a blasting operation.

CHIPPING AND GRINDING. An activity that mechanically reduces the size of organic matter.

COMPOSTING OPERATION. An operation that is conducted for the purpose of producing compost. The operation shall be by one or more of the following processes used to produce a compost product: static pile, windrow pile or aerated static pile.

DEAD-END ROAD. A road that has only one point of vehicular ingress/egress, including cul-de-sacs and looped roads.

DISTANCE MEASUREMENT. All specified or referenced distances are measured along the ground, unless otherwise stated.

EXPLOSIVES PERMIT. A permit to possess or use explosives, issued by the Issuing Officer, pursuant to California Health and Safety Code sections 12000 et seq. and Chapter 56 of this code. An explosives permit shall be valid for a period not to exceed one year, as provided in the permit conditions.

FIRE APPARATUS ACCESS ROAD. A road that provides fire apparatus access from a fire station to a facility, building or portion thereof. This is a general term that includes, but is not limited to a fire lane, public street, private street, driveway, parking lot lane and access roadway.

FIRE AUTHORITY HAVING JURISDICTION (FAHJ). The designated entity providing enforcement of fire regulations as they relate to planning, construction and development. The FAHJ may also provide fire suppression and other emergency services.

FIRE CHIEF. The fire chief is one of the following:

(a) The person appointed by the Board of Supervisors to serve as fire chief in the unincorporated areas not within a fire protection district.

(b) The chief officer of a fire protection district.

(c) The Fire Warden or her or his delegated representative when enforcing section 96.1.5608.1 of this Chapter.

FIRE CODE OFFICIAL. The Fire Warden or her or his delegated representative, the fire chief or a duly authorized representative, or other person as may be designated by law, appointment or delegation and charged with the administration and enforcement of this Chapter.

FIRE DEPARTMENT. Any regularly organized fire department, fire protection district, fire company, or legally formed volunteer fire department registered with the

County of San Diego regularly charged with the responsibility of providing fire protection to a jurisdiction.

FIRE HAZARD. Any condition or conduct which: (a) increases or may increase the threat of fire to a greater degree than customarily recognized as normal by persons in the public service regularly engaged in preventing, suppressing or extinguishing fire or (b) may obstruct, delay, hinder or interfere with the operations of the fire department or the egress of occupants in the event of fire.

FIRE PROTECTION DISTRICT. Any fire protection district created under State law and any water district providing fire protection services.

FUEL MODIFICATION ZONE. A strip of land where combustible vegetation has been thinned or modified or both and partially or totally replaced with approved fire-resistant and/or irrigated plants to provide an acceptable level of risk from vegetation fires. Fuel modification reduces the radiant and convective heat on a structure and provides valuable defensible space for firefighters to make an effective stand against an approaching fire front.

GREENWASTE. Organic material that includes, but is not limited to, yard trimmings, plant waste, manure, untreated wood wastes, paper products and natural fiber products.

HAZARDOUS FIRE AREA. Any geographic area mapped by the State or designated by a local jurisdiction as a moderate, high or very high fire hazard area or which the FAHJ has determined is a hazardous fire area, because the type and condition of vegetation, topography, weather and structure density increase the probability that the area will be susceptible to a wildfire.

HOGGED MATERIALS. Mill waste consisting mainly of hogged bark but may include a mixture of bark, chips, dust or other by-product from trees and vegetation.

INSPECTOR. For the purposes of sections 96.1, 5601.2, an inspector is a person on the Issuing Officer's approved list of inspectors authorized to conduct inspections, before and after a blast. To be on the Issuing Officer's approved list, an inspector shall have a blasting license issued by Cal/OSHA.

MAJOR BLASTING. A blasting operation that does not meet the criteria for minor blasting.

MID-RISE BUILDING. A building four stories or more high, but not exceeding 75 feet in height and not defined as a high-rise building by section 202 of the California Building Code. Measurements shall be made from the underside of the roof or floor above the topmost space that may be occupied to the lowest fire apparatus access road level.

MINOR BLASTING. A blasting operation that meets all of the following criteria: quantity of rock to be blasted does not exceed 100 cubic yards per shot, bore hole diameter does not exceed 2 inches, hole depth does not exceed 12 feet, maximum charge weight does not exceed 8 pounds of explosives per delay and the initiation of each charge will be separated by at least 8 milliseconds. The maximum charge weight shall not exceed the Scaled Distance as shown below:

Distance from Blast Site (In Feet)	Scale-Distance Factor
0 - 300	Mandatory Seismic Monitoring
301 - 5,000	55
5,000+	65

MULCHING. The process by which mixed greenwaste is mechanically reduced in size for the purpose of making compost.

RESPONSE TIME. The elapsed time from the fire department's receipt of the first alarm to when the first fire unit arrives at the scene.

STATIC PILE. A composting process that is similar to the aerated static pile except that the air source may or may not be controlled.

STRUCTURE. That which is built or constructed, an edifice or building of any kind, or any piece of work artificially built up or composed of parts joined together in some manner.

TRAVEL TIME. The estimated time it would take for a responding agency to travel from the fire station to the furthest structure in a proposed development project, determined by measuring the safest, most direct, appropriate and reliable route with consideration given to safe operating speeds for heavy fire apparatus.

WINDROW COMPOSTING PROCESS. The process in which compostable material is placed in elongated piles. The piles or windrows are aerated and/or mechanically turned on a periodic basis.

WOOD CHIPS. Chips of various species of wood produced or used in chipping and grinding operations.

SEC. 96.1.304.1.4. OUTDOOR CARNIVALS AND FAIRS.

Section 304.1.4 is added to the California Fire Code to read:

Sec. 304.1.4 Outdoor carnivals and fairs. Outdoor carnivals and fairs shall only be conducted on grounds free of combustible vegetation or trimmed to the satisfaction of the FAHJ.

SEC. 96.1.305.5. ROCKETS, MODEL AIRCRAFT AND SIMILAR DEVICES.

Section 305.5 is added to the California Fire Code to read:

Sec. 305.5 Rockets, model aircraft and similar devices. Rockets, model airplanes, gliders, balloons, sky lanterns, floating luminary or similar devices powered with an engine, propellant, open flame or other feature liable to start or cause a fire shall not be projected into or across hazardous fire areas without prior approval of the fire code official.

SEC. 96.1.307.5. ATTENDANCE OF OPEN BURNING AND RECREATIONAL FIRES.

Section 307.5 of the California Fire Code is revised to read:

Sec. 307.5 Attendance. Open burning, bonfires, recreational fires and the use of portable outdoor fireplaces shall be constantly attended by an adult until the fire is extinguished. A minimum of one portable fire extinguisher complying with section 906 with a minimum 4-A rating or other approved on-site fire-extinguishing equipment, such as dirt, sand, water barrel, garden hose or water truck, shall be available for immediate utilization.

SEC. 96.1.319. MID-RISE BUILDINGS.

Section 319 is added to the California Fire Code to read:

SECTION 319
MID-RISE BUILDINGS

Sec 319.1 General. A newly constructed mid-rise building or a mid-rise building which undergoes a complete renovation that requires the building to be completely vacated shall comply with this section.

Exceptions:

1. Buildings used exclusively as an open parking garage.

2. Buildings where all floors above the fourth floor level are used exclusively as an open parking garage.

3. Buildings such as a power plant, lookout tower, steeple, grain house, and other similar structures with intermittent human occupancy.

Sec. 319.1.1 Automatic fire sprinkler systems and standpipes. Mid-rise buildings shall be protected throughout by an automatic fire sprinkler system designed and installed in conformance with the latest edition of NFPA 13 and in accordance with the following:

1. A shut-off valve and a water flow alarm shall be provided for each floor. Each shut-off valve and water flow alarm shall be electronically supervised.

2. Mid-rise buildings shall be provided with a class I standpipe system that is interconnected with the automatic fire sprinkler system. The system shall consist of 2½-inch hose valves located in each stair enclosure on every floor. Two hose outlets shall be located on the roof outside of each stair enclosure which penetrates the roof. The standpipe system shall be designed, installed and tested in accordance with the latest edition of NFPA 14.

3. Fire department standpipe connections and valves serving each floor shall be located in the vestibule and located in a manner so as not to obstruct egress when hose lines are connected and charged.

Sec. 319.1.2 Smoke detection. Smoke detectors shall be provided in accordance with this section. Smoke detectors shall be connected to an automatic fire alarm system and shall be installed in accordance with the latest edition of NFPA 72. The actuation of any device required by this section shall operate the emergency voice alarm signal system and shall operate all equipment necessary to prevent the circulation of smoke through air return and exhaust ductwork. Smoke detectors shall be located as follows:

1. In every mechanical equipment, electrical, transformer, telephone equipment, unmanned computer equipment, elevator machinery or similar room and in all elevator lobbies. Elevator lobby detectors shall be connected to an alarm verification zone or be listed as a releasing device.

2. In the main return air and exhaust air plenum of each air conditioning system. The smoke detector shall be located in a serviceable area downstream of the last duct inlet.

3. At each connection to a vertical duct or riser serving two or more stories from a return air duct or plenum of an air conditioning system. In Group R,

Division 1 and 2 occupancies, an approved smoke detector is allowed to be used in each return air riser carrying not more than 5,000 cubic feet per minute and not serving more than 10 air inlet openings.

4. For Group R, Division 1 and 2 occupancies, in all corridors serving as a means of egress for an occupant load of 10 or more persons.

Sec. 319.1.3 Fire alarm system. An approved and listed, automatic and manual, fully addressable and electronically-supervised fire alarm system shall be provided in conformance with this code and the California Building Code.

Sec. 319.1.4 Emergency voice alarm signaling system. The operation of any automatic fire detector or water flow device shall automatically sound an alert tone followed by a pre-recorded voice instruction giving appropriate information and direction on a general or selective basis to the following terminal areas:

1. Elevators
2. Elevator lobbies
3. Corridors
4. Exit stairways
5. Rooms and tenant spaces
6. Dwelling units
7. Hotel guest rooms
8. Areas designated as safe refuge within the building

Sec. 319.1.5 Fire command center. A fire command center for fire department operations shall be provided. The location and accessibility of the fire command center shall be approved by the fire department. The room shall be separated from the remainder of the building by not less than a 1-hour fire barrier. The room shall be a minimum of 200 square feet with a minimum dimension of 10 feet. It shall contain the following facilities at a minimum:

1. Voice alarm and public address panels
2. Fire department communications panel
3. Fire alarm enunciator panel
4. Elevator enunciator panel (when building exceeds 55 feet in height)
5. Status indicators and controls for air-handling systems (stairwell pressurization)
6. Controls for unlocking stairwell doors
7. Fire pump status indicators (if required)
8. Set of complete building plans
9. Elevator control switches for switching of emergency power
10. Work table

Sec. 319.1.6 Annunciation identification. Control panels in the central control station shall be permanently identified as to their function. Water flow, automatic fire detection and manually-activated fire alarms, and supervisory and trouble signals shall be monitored by an approved UL-listed central monitoring station and annunciated in the fire command center by means of an audible and visual indicator. For the purposes of annunciation, zoning shall be in accordance with the following:

1. When the system serves more than one building, each building shall be a separate zone.
2. Each floor in a building shall be a separate zone.
3. When one or more risers serve the same floor, each riser shall be a separate zone.

Sec. 319.1.7 Elevators. Elevators and elevator lobbies shall comply with Chapter 30 of the California Building Code. At least one elevator cab shall be assigned for fire department use, and shall serve all floors of the building. This cab shall be provided large enough to accommodate an ambulance-type stretcher in accordance with section 3002.4 of the California Building Code.

Sec. 319.1.8 Fire department communication system. An approved two-way fire department communication system designed and installed in accordance with the latest edition of NFPA 72 shall be provided for fire department use per section 907.2.13.2.

Sec. 319.1.9 Means of egress. In addition to the requirements of Chapter 10, egress components of mid-rise buildings shall comply with sections 319.1.8.1 through 319.1.8.5.

Sec. 319.1.9.1 Extent of enclosure. Stairway enclosures shall be continuous and shall fully enclose all portions of the stairway. Exit enclosures shall exit directly to the exterior of the building or include an exit passageway on the ground floor leading to the exterior of the building. Each exit enclosure shall extend completely through the roof and be provided with a door that leads onto the roof.

Sec. 319.1.9.2 Pressurized enclosures and stairways. All required stairways and enclosures in a mid-rise building shall be pressurized as specified in section 909. Pressurized stairways shall be designed to exhaust smoke manually when needed.

Sec. 319.1.9.3 Vestibules. Pressurized stairway enclosures serving a mid-rise building shall be provided with a pressurized entrance vestibule on each floor that complies with section 909.

Sec. 319.1.9.4 Pressure differences. The minimum pressure difference between a vestibule and adjacent areas shall comply with section 909.

Sec. 319.1.9.5 Locking of stairway doors. All stairway doors that are locked to prohibit access from the interior of the stairway shall have the capability of being unlocked simultaneously, without unlatching, upon a signal from the fire command center. Upon failure of normal electrical service or activation of any fire alarm, the locking mechanism shall automatically retract to the unlocked position.

A telephone or other two-way communication system connected to an approved emergency service which operates continuously shall be provided at not less than every third floor in each required exit stairway vestibule.

Approved signage stating doors are locked shall be provided in each stairwell vestibule on each floor in which entry may be made and on each floor in which a telephone is located. Hardware for locking stairway vestibule doors shall be State Fire Marshal listed and approved by the chief by permit before installation. Stairway doors located between the vestibules and the stairway shaft shall not be locked.

SEC. 96.1.320. STORAGE OF FIREWOOD.

Section 320 is added to the California Fire Code to read:

SECTION 320
STORAGE OF FIREWOOD

Sec. 320.1 General. Firewood shall not be stored in unenclosed space beneath a building or structure, on a deck or under eaves, a canopy or other projection or overhang. When required by the fire code official, firewood or other combustible material stored in the defensible space surrounding a structure shall be located at least 30 feet from any structure and separated from the crown of any trees by a minimum of 15 feet, measured horizontally. Firewood and combustible materials not for use on the premises shall be stored so as to not pose a fire hazard.

AMENDMENT ADDING SECTION 408.2.3.

The San Miguel Fire Protection District adopts the following code amendment:

Sec. 408.2.3 Automatic External Defibrillators (AED) – A public assembly occupancy with an occupant load of 300 or greater shall be equipped with an Automatic External Defibrillator (AED). The goal of this section is to achieve a three-minute response time by a trained lay rescuer after a person suffers cardiac arrest. When an AED is required by this section:

1. The property owner shall install an AED prior to final inspection approval. The property owner shall be responsible to maintain the AED in proper working order.
2. The property owner shall establish a program to train building occupants (tenants or employees) in Cardio Pulmonary Resuscitation and the use of an AED in accordance with American Heart Association or American Red Cross guidelines. The property owner shall obtain the services of a licensed physician to approve and oversee the program.
3. Training and equipment maintenance records shall be maintained in the building and be available to the fire district upon request.
4. An AED shall be mounted in a wall mounted storage cabinet, on hangers, on the brackets supplied by the manufacturer or on a shelf, in a centrally accessible area, free from blockage by storage or equipment and protected from harmful elements such as moisture and temperature extremes. The AED shall be mounted so that the top is not more than five feet above the floor.

SEC. 96.1.501.3.1. FIRE APPARATUS ACCESS MODIFICATIONS.

Section 501.3.1 is added to the California Fire Code to read:

Sec. 501.3.1 Fire apparatus access modifications. Plans for the modification of fire apparatus access road shall be submitted to the fire code official for review and approval prior to construction or modification of any fire apparatus road.

SEC. 96.1.503. FIRE APPARATUS ACCESS ROADS

Section 503 of the California Fire Code is revised to read:

SECTION 503
FIRE APPARATUS ACCESS ROADS

Sec. 503.1 General. Fire apparatus access roads, including private residential driveways, shall be required for every building hereafter constructed when any portion of

an exterior wall of the first story is located more than 150 feet from the closest point of fire department vehicle access.

Fire apparatus access roads, except private residential driveways, shall be provided and maintained for purposes of rapid and reliable fire apparatus access and for unobstructed traffic circulation for evacuation or relocation of civilians during a wildfire or other emergency.

Fire apparatus access roads shall be provided and maintained in compliance with this section and the most recent edition and any amendments thereto, of public and private road standards as adopted by the County of San Diego (San Diego County Standards for Private Roads and Public Roads, San Diego County Department of Public Works). The fire code official may modify the requirements of this section if the modification provides equivalent access.

Sec. 503.1.1 Buildings and facilities. Approved fire apparatus access roads shall be provided for every facility, building or portion of building hereafter constructed or moved into or within the jurisdiction. The fire apparatus access road shall comply with the requirements of this section and shall extend within 150 feet of all portions of the facility and all portions of the exterior walls of the first story of the building as measured by an approved route around the exterior of the building or facility.

Exceptions: The fire code official may increase the 150 foot minimum where:

1. Fire apparatus access roads cannot be installed because of topography, waterways, nonnegotiable grades or other similar conditions, and an approved alternative means of fire protection is provided.

2. There are no more than two Group R-3 or Group U occupancies.

Sec. 503.1.2 Additional access. The fire code official is authorized to require more than one fire apparatus access road based on the potential for impairment of a single road by vehicle congestion, condition of terrain, climatic conditions or other factors that could limit access. When additional fire apparatus access roads are necessary as mitigation for the exceedance of the maximum allowable dead-end road length, the additional fire apparatus access road must be remote from the primary fire apparatus access road.

Sec. 503.1.3 Dead-end roads. The maximum length of a dead-end road, including all dead-end roads accessed from that dead-end road, shall not exceed the following cumulative lengths, regardless of the number of parcels served:

ZONING FOR PARCEL SERVED BY DEAD-END ROAD(s)	CUMULATIVE LENGTH OF DEAD-END ROAD(s)
Parcels zoned for less than 1 acre	800 feet
Parcels zoned for 1 acre to 4.99 acres	1,320 feet
Parcels zoned for 5 acres to 19.99 acres	2,640 feet
Parcels zoned for 20 acres or larger	5,280 feet

All lengths shall be measured from the edge of the roadway surface at the intersection where the road begins to the end of the road surface at its farthest point. Where a dead-end road crosses areas of differing zoned parcel sizes, requiring different length limits, the shortest allowable length shall apply. Where parcels are zoned 5 acres or larger, turnarounds shall be provided at a maximum of 1,320 foot intervals. Each dead-end road shall have a turnaround approved by the fire code official and constructed at its terminus.

Sec. 503.1.4 High-piled storage. Fire department vehicle access to buildings used for high-piled combustible storage shall comply with the applicable provisions of Chapter 32.

Sec. 503.2 Specifications. Fire apparatus access roads shall be installed and arranged in compliance with sections 503.2.1 through 503.2.8.

Sec. 503.2.1 Dimensions. The dimensions of fire apparatus access roads shall be in accordance with the following:

(a) Fire apparatus access roads shall have an unobstructed improved width of not less than 24 feet, except for single-family residential driveways serving no more than two single-family dwellings, which shall have a minimum of 16 feet of unobstructed improved width. Any of the following, which have separated lanes of one-way traffic: gated entrances with card readers, guard stations or center medians, are allowed, provided that each lane is not less than 14 feet wide.

(b) Fire apparatus access roads that are public or private roads which are provided or improved as a result of a Tentative Map, Tentative Parcel Map or a Major/Minor Use Permit shall have the dimensions as set forth by the County of San Diego Standards for Public and Private Roads.

(c) All fire apparatus access roads shall have an unobstructed vertical clearance of not less than 13 feet 6 inches.

(d) Vertical clearances or road widths shall be increased when the fire code official determines that vertical clearances or road widths are not adequate to provide fire apparatus access.

(e) Vertical clearances or road width may be reduced when the fire code official determines the reduction does not impair access by fire apparatus. In cases where the vertical clearance has been reduced, approved signs shall be installed and maintained indicating the amount of vertical clearance.

(f) The standard cross-slope shall be 2 percent; minimum cross-slope shall be 1 percent; maximum cross-slope shall be 5 percent.

AMENDMENT TO SECTION 503.2.1.1.

The Alpine, Bonita-Sunnyside, Deer Springs, North County, Ramona, Rancho Santa Fe, Rincon Del Diablo, San Miguel and Valley Center Fire Protection Districts adopt the following code amendment:

Sec. 503.2.1.1 Road phasing requirement for single family dwellings on existing legal parcels.

(a) The fire access roadway requirement for widening an existing, improved and paved fire apparatus roadway shall be as provided in Table 503.2.1.1. The fire access roadway shall be constructed to extend from the property line to the nearest public road.

TABLE 503.2.1.1 - PHASING REQUIREMENT
Fire Apparatus Access Roadway – Single Family Dwellings

Number of Parcels Served	Unobstructed Road Width	Roadways Over 600 foot Long
1-2	16-foot, paved	Turnouts every 400 feet
3-8	20-foot, paved	Turnouts every 400 feet
9 or more	24-foot, paved	Not required

(b) The access roadway shall not be required to be improved for a non-habitable accessory structure or a residential addition or remodel less than 500 square feet if the access roadway has already been improved and paved to a minimum width of 20 feet. If the roadway is less than 20 wide feet, the roadway shall be widened to 20 feet. The preceding addition or remodel exception is limited to one permit addition or remodel per three-year period from the date of the last permit approval.

Exception: Vertical clearances or road width may be reduced when the fire code official determines the reduction does not impair access by fire apparatus. In cases where the vertical clearance has been reduced, approved signs shall be installed and maintained indicating the amount of vertical clearance.

Sec. 503.2.2 Authority to increase minimums. The fire code official shall have the authority to require an increase in the minimum access road widths where the fire code official determines the minimum are inadequate for fire or rescue operations.

Sec. 503.2.3 Surface. Fire apparatus access roads shall be designed and maintained to support the imposed loads of fire apparatus (not less than 75,000 lbs. unless authorized by the fire code official) and shall be provided with an approved paved surface so as to provide all-weather driving capabilities. The paving and sub-base shall be installed to the standards specified in the County of San Diego Parking Design Manual. A residential driveway constructed of 3½" Portland cement concrete may be installed on any slope up to 20% provided that slopes over 15% have a deep broom finish perpendicular to the direction of travel to enhance traction. The fire code official may allow a sufacing material of 4 inches of decomposed granite on fire apparatus access roads with a slope of 10 percent or less in areas allowed by the San Diego County Standards for Private Roads.

AMENDMENT TO SECTION 503.2.3.

The Alpine, Bonita-Sunnyside, Deer Springs, Lakeside, North County, Ramona, Rancho Santa Fe, Rincon Del Diablo, San Marcos, San Miguel, Valley Center and Vista Fire Protection Districts adopt the following code amendment:

Sec. 503.2.3 Surface. Fire apparatus access road shall be designed and maintained to support the imposed loads of fire apparatus (not less than 75,000 lbs. unless authorized by the FAHJ) and shall be provided with an approved paved surface so as to provide all-weather driving capabilities. The paving and sub-base shall be installed to the standards specified in the County of San Diego Parking Design Manual. A residential driveway constructed of 3½" Portland cement concrete may be installed on any slope up to 20% provided that slopes over 15% have a deep broom finish perpendicular to the direction of travel or other approvel surface to enhance traction.

Sec. 503.2.4 Roadway radius. The horizontal inside radius of a fire apparatus access road shall comply with the County public and private road standards approved by the Board of Supervisors. The horizontal inside radius for a private residential driveway shall be a minimum of 28 feet, as measured on the inside edge of the improvement width or as approved by the fire code official. The length of vertical curves of fire apparatus access roads shall not be less than 100 feet, or as approved by the fire code official.

Sec. 503.2.5 Dead ends. All dead-end fire access roads in excess of 150 feet in length shall be provided with approved provisions for turning around emergency apparatus. A cul-de-sac shall be provided in residential areas where the access roadway serves more than 2 structures. The minimum unobstructed radius width for a cul-de-sac in a residential area shall be 36 feet paved, 40 feet graded, or as approved by the fire code

official. The fire code official shall establish a policy identifying acceptable turnarounds for various project types.

Sec. 503.2.6 Bridges and elevated surfaces. Where a bridge or an elevated surface is part of a fire apparatus access road, the bridge shall be constructed and maintained in accordance with AASHTO HB-17. Bridges and elevated surfaces shall be designed for a live load sufficient to carry the imposed loads of fire apparatus. Vehicle load limits and clearance limitations shall be posted at both entrances to bridges when required by the fire code official. Where elevated surfaces designed for emergency vehicle use are adjacent to surfaces which are not designed for such use, approved barriers, approved signs or both shall be installed and maintained when required by the fire code official.

Sec. 503.2.6.1 Bridges with one traffic lane. When approved by the fire code official, private bridges providing access to not more than two residential dwellings may have one 12 foot wide travel lane; however, it shall provide for unobstructed visibility from one end to the other, and turnouts shall be provided at both ends.

Sec. 503.2.7 Grade. The gradient for a fire apparatus access roadway shall not exceed 15.0%. The fire code official may allow roadway grades up to 20.0% provided that the roadway surface conforms to section 503.2.3. The fire code official may require additional mitigation measures where he deems appropriate. The angle of departure and angle of approach of a fire access roadway shall not exceed 7 degrees (12 percent) or as approved by the fire code official.

Sec. 503.2.8 Roadway turnouts. When required by the fire code official, turnouts shall be a minimum of 12 feet wide and 30 feet long with a minimum 25 foot taper on each end.

Exception: The minimum width of the turnout may be reduced to 10 feet wide when the fire code official determines the reduction does not impair access by fire apparatus.

Sec. 503.3 Marking. When required by the fire code official, approved signs or other approved notices shall be provided for fire apparatus access roads to identify such roads or prohibit the obstruction thereof. Signs or notices shall be maintained in a clean and legible condition at all times and be replaced or repaired when necessary to provide adequate visibility. All new public roads, all private roads within major subdivisions and all private road easements serving four or more parcels shall be named. Road name signs shall comply with County of San Diego Department of Public Works Design Standard #DS-13.

Sec. 503.3.1 Fire lane designation. Where the fire code official determines that it is necessary to ensure adequate fire access, the fire code official may designate existing roadways as fire access roadways as provided by Vehicle Code section 22500.1.

Sec. 503.4 Obstruction of fire apparatus access roads. Fire apparatus access roads shall not be obstructed in any manner, including the parking of vehicles. The minimum road widths and clearances established in section 503.2.1 shall be maintained at all times.

Sec. 503.4.1 Traffic calming devices. Traffic calming devices (including, but not limited to, speed bumps, speed humps, speed control dips, etc.) shall be prohibited unless approved by the fire code official.

Sec. 503.5 Required gates or barricades. The fire code official is authorized to require the installation and maintenance of gates or other approved barricades across fire apparatus access roads, trails or other access ways, not including public streets, alleys or highways. Electric gate openers, where provided, shall be listed in accordance with UL 325. Gates intended for automatic operation shall be designed, constructed and installed to comply with the requirements of ASTM F2200.

Sec. 503.5.1 Secured gates and barricades. When required, gates and barricades shall be secured as approved by the fire code official. Roads, trails and other access ways that have been closed and obstructed in the manner prescribed by section 503.5 shall not be trespassed on or used unless authorized by the owner and the fire code official.

Exception: The restriction on use shall not apply to public officers acting within the scope of duty.

Sec. 503.5.2 School fences and gates. School grounds may be fenced and gates therein may be equipped with locks, provided that safe dispersal areas based on three square feet per occupant are located between the school and the fence. Such required safe dispersal areas shall not be located less than 50 feet from school buildings.

Every public and private school shall conform to Education Code section 32020, which states:

The governing board of every public school district and the governing authority of every private school, which maintains any building used for the instruction or housing of school pupils on land entirely enclosed (except for building walls) by fences or walls, shall, through the cooperation of local law enforcement and fire protection agencies having jurisdiction of the area, provide for the erection of gates in these fences or walls. The gates shall be of sufficient size to permit the entrance of ambulances, police equipment and fire-fighting apparatus used by law enforcement and fire protection agencies. There shall be no less than one access gate and there shall be as many of these

gates as needed to ensure access to all major buildings and ground areas. If these gates are equipped with locks, the locking devices shall be designed to permit ready entrance by the use of chain or bolt-cutting devices.

Sec. 503.6 Security gates. No person shall install a security gate or security device across a fire access roadway without the fire code official's approval.

1. An automatic gate across a fire access roadway or driveway shall be equipped with an approved emergency key-operated switch overriding all command functions and opening the gate.
2. A gate accessing more than four residences or residential lots or a gate accessing hazardous institutional, educational or assembly occupancy group structure, shall also be equipped with an approved emergency traffic control-activating strobe light sensor or other device approved by the fire code official, which will activate the gate on the approach of emergency apparatus.
3. An automatic gate shall be provided with a battery back-up or manual mechanical disconnect in case of power failure.
4. An automatic gate shall meet fire department policies deemed necessary by the fire code official for rapid, reliable access.
5. When required by the fire code official, an automatic gate in existence at the time of adoption of this chapter is required to install an approved emergency key-operated switch or other mechanism approved by the fire code official, at an approved location, which overrides all command functions and opens the gate. A property owner shall comply with this requirement within 90 days of receiving written notice to comply.
6. Where this section requires an approved key-operated switch, it may be dual-keyed or equipped with dual switches provided to facilitate access by law enforcement personnel.
7. All gates providing access from a road to a driveway shall be located a minimum of 30 feet from the nearest edge of the roadway and shall be at least two feet wider than the width of the traffic lane(s) serving the gate.
8. Electric gate openers, where provided, shall be listed in accordance with UL 325. Gates intended for automatic operation shall be designed, constructed and installed to comply with the requirements of ASTM F2200.

SEC. 96.1.505. PREMISES IDENTIFICATION.

Section 505 of the California Fire Code is revised to read:

SECTION 505
PREMISES IDENTIFICATION

Sec. 505.1 Address numbers. Approved numbers and/or addresses shall be placed on all new and existing buildings and at appropriate additional locations, plainly visible and legible from the street or roadway fronting the property when approaching from either direction. The numbers shall contrast with their background and shall meet the following minimum size standards: 4" high with a ½" stroke for residential buildings, 6" high with a ½" stroke for commercial and multi-residential buildings and 12" high with a 1" stroke for industrial buildings. Additional numbers shall be required where deemed necessary by the fire code official, such as rear access doors, building corners and entrances to commercial centers. The fire code official may establish different minimum sizes for numbers for various categories of projects.

AMENDMENT TO SECTION 505.1.

The Deer Springs Protection District adopts the following code amendment:

Sec. 505.1 Address numbers. Approved numbers and/or addresses shall be placed on all new and existing buildings and at appropriate additional locations, plainly visible and legible from the street or roadway fronting the property when approaching from either direction. Address numbers on new construction shall be automatically illuminated by low voltage lighting. The numbers shall contrast with their background and shall meet the following minimum size standards: 4" high with a ½" stroke for residential buildings, 6" high with a ½" stroke for commercial and multi-residential buildings and 12" high with a 1" stroke for industrial buildings. Additional numbers shall be required where deemed necessary by the fire code official, such as rear access doors, building corners and entrances to commercial centers. The fire code official may establish different minimum sizes for numbers for various categories of projects.

Sec. 505.2 Street or road signs. Streets and roads shall be identified with approved signs. Temporary signs shall be installed at each street intersection when construction of new roadways allows passage by vehicles. Signs shall be of an approved size, weather-resistant and be maintained until replaced by permanent signs.

Sec. 505.3 Easement address signs. A road easement which is not named differently from the roadway from which it originates shall have an address sign installed and maintained listing all street numbers occurring on that easement. The sign shall be located where the easement intersects the named roadway. The numbers on the sign shall contrast with the background and have a minimum height of 4" and a minimum stroke of ½".

Sec. 505.4 Directory map. A lighted directory map, meeting current fire department standards, shall be installed at the driveway entrance to a residential project or a mobile home park, with more than 15 units.

Sec. 505.5 Response map updates. Any new development which necessitates updating emergency response maps due to new structures, hydrants, roadways or similar features shall be required to provide map updates in a format compatible with current department mapping services and shall be charged a reasonable fee for updating all response maps. At a minimum, the map updates shall be provided in PDF or a CAD format approved by the FAHJ.

SEC. 96.1.506.1.3. EMERGENCY KEY ACCESS.

Section 506.1.3 is added to the California Fire Code portion to read:

Sec. 506.1.3 Emergency key access. All central station-monitored fire detection systems and fire sprinkler systems shall have an approved emergency key access box on site in an approved location. The owner or occupant shall provide and maintain current keys for any structure for fire department placement in the box and shall notify the fire department in writing when the building is re-keyed.

SEC. 96.1.507.2. TYPE OF WATER SUPPLY.

Section 507.2 of the California Fire Code is revised to read:

Sec. 507.2 Type of water supply. Water supply may consist of reservoirs, pressure tanks, elevated tanks, water mains or other fixed systems, as approved by the fire code official, capable of providing the required fire flow in a reliable manner. In setting the requirements for fire flow, the fire code official shall follow section 507.3 or Appendix B of the County Fire Code, or the standard published by the Insurance Services Office, "Guide for Determination of Required Fire Flow".

Sec. 507.2.1 Private fire service mains. Private fire service mains and appurtenances shall be installed in accordance with NFPA 24.

Sec. 507.2.2 Water tanks. Water tanks for private residential fire protection, when authorized by the fire code official, shall comply with Table 507.2.2 and installed in accordance with NFPA 22. Water tanks for commercial fire protection, when authorized by the fire code official, shall be sized utilizing nationally-recognized standards.

TABLE 507.2.2 RESIDENTIAL WATER TANK REQUIREMENTS			
Building Square Feet	Gallons Per Minute Water Flow	Capacity Gallons	Duration Minutes
Up to 1,500	250	5,000	20
Over 1,500	250	10,000	40
When the exposure distance is one hundred feet (100') or less from an adjacent property, or where additional hazards or higher fire flow exists, the required water storage may be modified by the fire code official.			

1. Tank bottom elevation shall be equal to or higher than the fire department connection on the premises. Regardless of domestic use, all tanks shall be equipped with a device that will ensure that the tank contains the designated amount of water for fire flow duration as determined by the FAHJ. Tank size may be increased to serve multiple structures on a single parcel.

2. Supply outlet shall be at least 4 inches in diameter from the base of the tank to the point of outlet at the fire department connection. The fire department connection shall have an approved means of controlling water flow. The fire department connection shall be at least one 4-inch National Standard Thread (male), reduced to one 2½ inch National Standard Thread (male). Additional outlets may be required.

3. Location of fire department outlet shall be shown on the plot plan when submitted to the FAHJ. Consideration will be given to topography, elevations, and distance from structures, driveway access, prevailing winds, etc.

4. The outlet shall be located along a fire apparatus access roadway and shall not be closer than 50 feet or further than 150 feet from the structure.

5. All exposed tank supply pipes shall be of an alloy or other material listed for above ground use. Adequate support shall be provided.

6. Water storage tanks shall be constructed from materials approved by the fire code official and installed per manufacturer recommendations.

7. The fire code official may require any necessary information to be submitted on a plot plan for approval.

8. Vessels previously used for products other than water shall not be allowed.

9. The bottom of the water storage tank shall be level with or above the building pad.

SEC. 96.1.507.3. FIRE FLOW.

Section 507.3 of the California Fire Code is revised to read:

Sec. 507.3 Fire flow. Fire flow requirements shall be based on Appendix B of the County Fire Code or the standard published by the Insurance Services Office, "Guide for Determination of Required Fire Flow." Consideration should be given to increasing the gallons per minute to protect structures of extremely large square footage and for such reasons as: poor access roads, grade and canyon rims, hazardous brush and response times greater than five minutes by a recognized fire department or fire suppression company. In hazardous fire areas the main capacity for new subdivisions shall not be less than 2,500 gallons per minute, unless otherwise approved by the fire code official. If fire flow increases are not feasible, the fire code official may require alternative design standards such as: alternative types of construction that provides a higher level of fire resistance, fuel break requirements, which may include required irrigation, modified access road requirements, specified setback distances for building sites addressing canyon rim developments and hazardous brush areas, and other requirements as authorized by this chapter and as required by the fire code official.

SEC. 96.1.507.5.1. FIRE PROTECTION WATER SUPPLIES-REQUIRED INSTALLATIONS.

Section 507.5.1 of the California Fire Code is revised to read:

Sec. 507.5.1 Required installations. The location, type and number of fire hydrants connected to a water supply capable of delivering the required fire flow shall be provided on the public or private street, or on the site of the premises to be protected or both. Fire hydrants shall be accessible to the fire department apparatus by roads meeting the requirements of section 503.

Sec. 507.5.1.1 Location of fire hydrants. Fire hydrants shall be located as required by the fire code official using the following criteria and taking into consideration departmental operational needs. Hydrants shall be located at intersections, at the beginning radius of cul-de-sacs and at intervals identified in the following tables and criteria. Hydrants located across heavily traveled roadways shall be not considered as serving the subject property.

Sec. 507.5.1.1.1 Requirements for single-family dwellings. In projects zoned for single-family dwellings, fire hydrants shall be installed in accordance with Table 507.5.1.1.1.

TABLE 507.5.1.1.1 DISTANCE BETWEEN HYDRANTS FOR SINGLE FAMILY DWELLINGS	
Parcels 2½ acres and larger:	Every 1,000 feet
Parcels ½ to 2½ acres:	Every 500 feet
Parcels less than ½ acre:	Every 350 feet

AMENDMENT TO SECTION 507.5.1.1.1.

The Alpine, Bonita-Sunnyside, Deer Springs, North County, Ramona, Rancho Santa Fe, San Miguel, Valley Center Fire Protection Districts adopt the following code amendment:

Sec. 507.5.1.1.1 Requirements for single-family dwellings. In projects zoned for single-family dwellings, fire hydrants shall be installed as provided in Table 507.5.1.1.1.

TABLE 507.5.1.1.1. DISTANCE BETWEEN HYDRANTS FOR SINGLE FAMILY DWELLINGS	
Parcels ½ acre and larger:	Every 500 feet from the structure
Parcels less than ½ acre:	Every 350 feet from the structure

Exception: Remodels and additions: An existing structure which is remodeled or added to where the amount of the new area does not exceed 1,500 square feet and the remodeled or additional area is protected with an approved automatic fire extinguishing system.

AMENDMENT TO SECTION 507.5.1.1.1.

The San Marcos Fire Protection District adopts the following code amendment:

17.64.140 Fire hydrant spacing. Section 507.5.1.1.1 of the California Fire Code is amended by the addition of Table 507.5.1.1.1 to read as follows:

TABLE 507.5.1.1.1 FIRE HYDRANT SPACING	
Single family residential (2½ acres and larger)	1,000 ft
Single family residential (up to 2½ acres)	600 ft

The number and size of hydrant outlets shall be as follows:

Single family residential – One 4" and one 2½" port
All other areas – Two 4" and one 2½" port

Sec. 507.5.1.1.2 Requirements for multi-family, commercial and industrial zones. In multi-family, commercial and industrial zones, fire hydrants shall be installed at intersections, at the beginning radius of cul-de-sacs and every 300 feet of fire apparatus access roadways, regardless of parcel size.

Sec. 507.5.1.1.3 Fire hydrant construction and configuration. All fire hydrants shall be of bronze construction, including all internal parts except seats. Alternative materials may be used if approved by the fire code official and the local water district having jurisdiction. The stems shall be designed and installed in a manner that will ensure that they will not be projected outward from the main body by internal water pressure due to disassembly. The number and size of fire hydrant outlets shall be as follows:

1. One 4 inch and one 2½ inch NST outlet.
2. One 4 inch and two 2½ inch NST outlets.

In some instances the fire code official may require a fire hydrant to have any other combination of 4 inch and 2½ inch outlets.

Sec. 507.5.1.2 Waterline extensions. The fire code official may require a waterline extension for the purpose of installing a fire hydrant if a water main is 1,500 feet or less from the property line.

Sec. 507.5.1.3 Hydrant for standpipe systems. Buildings equipped with a standpipe system installed in accordance with section 905 shall have a fire hydrant within 100 feet of the fire department connections.

Exception: The distance shall be permitted to exceed 100 feet where approved by the fire code official.

SEC. 96.1.507.5.7. FIRE HYDRANT AND FIRE VALVE LOCATION.

Section 507.5.7 is added to the California Fire Code to read:

Sec. 507.5.7 Fire hydrant and fire valve location. The fire hydrant or fire valve shall be between 14 to 24 inches above grade, no closer than 4 feet nor further than 12 feet from the roadway, and 8 feet from combustible vegetation.

Sec. 507.5.7.1 Signing of water sources and fire department connections. The fire code official may require fire hydrants and fire department connections to be identified. Fire hydrants may be identified by a reflectorized blue marker and fire department connections may be identified by a reflectorized green marker, with a minimum dimension of 3 inches, in the center of the travel lane adjacent the water source, or by other methods approved by the fire code official.

SEC. 96.1.603.6.6. SPARK ARRESTERS.

Section 603.6.6 is added to the California Fire Code to read:

Sec. 603.6.6 Spark arresters. All structures having a chimney, flue or stovepipe attached to a fireplace, stove, barbecue or other solid or liquid fuel burning equipment or device shall have the chimney, flue or stovepipe equipped with an approved spark arrester. An approved spark arrester is a device intended to prevent sparks from escaping into the atmosphere, constructed of welded or woven wire mesh, 12 gauge thickness or larger, with openings no greater than ½ inch, or other alternative material the FAHJ determines provides equal or better protection.

SEC. 96.1.603.8.1. RESIDENTIAL INCINERATORS.

Section 603.8.1 of the California Fire Code is revised to read:

Sec. 603.8.1 Residential Incinerators. Residential incinerators are prohibited in the unincorporated area of the County.

SEC. 96.1.605.11.3.3.3 SMOKE VENTILATION.

Section 605.11.3.3.3 of the California Fire Code is revised to read:

Sec. 605.11.3.3.3 Smoke ventilation. The solar photovoltaic installation shall be designed to meet the following requirements:

1. Arrays shall be no greater than 150 feet in length in either axis in order to create opportunities for smoke ventilation operations.
2. Smoke ventilation options between array sections shall be one of the following:
    a. A pathway 8 feet or greater in width
    b. A pathway 4 feet or greater in width and bordering roof skylights or smoke and heat vents
    c. A pathway 4 feet or greater in width and bordering 4 foot by 8 foot venting cutouts every 20 feet on alternating sides of the pathway.

The fire code official may require additional means of ventilating a building including the installation of a manually-operated ventilation system.

SEC. 96.1.605.11.4 GROUND-MOUNTED PHOTOVOLTAIC ARRAYS.

Section 605.11.4 the California Fire Code is revised to read:

Sec. 605.11.4 Ground-mounted photovoltaic arrays. Ground-mounted photovoltaic array installations shall meet the requirements of sections 605.11.4.1 through 605.11.4.4.

Sec. 605.11.4.1 Fire apparatus access roads. Fire apparatus access roads to ground-mounted photovoltaic arrays, associated equipment structures and operations/maintenance buildings shall comply with section 503.

> **Exception:** Private residential and agricultural systems less than 10 acres in size and where the energy generated is primarily for on-site use are exempt from this requirement.

Sec. 605.11.4.1.1 Perimeter fire apparatus access roadway. Ground-mounted photovoltaic arrays 10 acres or larger in size shall provide a fire apparatus access roadway around the perimeter of the project. The perimeter fire apparatus access roadway shall comply with section 503.

Sec. 605.11.4.2 Fuel modification. Combustible vegetation within the array and to a distance of 30 feet from the array and associated equipment shall be reduced to a

height of no more than 6 inches. The fuel modification zone may be increased when required by the fire code official or as recommend by a fire protection plan.

> **Exception:** For private residential and agricultural systems less than 10 acres in size and where the energy generated is used primarily on-site, the required fuel modification zone may be reduced to 10 feet from the array and associated equipment.

Operation/maintenance buildings shall be provided with fuel modification zones that comply with section 4907.2.

Sec. 605.11.4.3 Water supply. Water supply for fire protection and suppression shall be provided for equipment structures and operations/maintenance buildings as required by section 507.

Sec. 605.11.4.4 Identification. Ground-mounted photovoltaic arrays with multiple equipment structures shall include a means of readily identifying each equipment structure. The fire code official may require a lighted directory map of the project to be installed on-site near the entrance to the facility for projects of 10 or more acres in size.

SEC. 96.1.901.4.7. FIRE DEPARTMENT CONNECTIONS.

Section 901.4.7 is added to the California Fire Code to read:

Sec. 901.4.7 Fire department connections. Fire hose threads used in connection with fire-extinguishing systems shall be National Standard Thread or as approved by the FAHJ. The location of fire department hose connections and control valves shall be approved by the fire code official.

SEC. 96.1.901.8.2. FIRE HYDRANTS AND FIRE APPLIANCES.

Section 901.8.2 is added to the California Fire Code to read:

Sec. 901.8.2 Fire hydrants and fire appliances. Commercial fire sprinkler system control valves shall not be shut off after activation of the sprinkler system, no matter what the reason for the activation until the shut off is authorized by fire personnel. Fire detection systems activated by fire, smoke, heat or any other cause shall not be reset until authorized by fire personnel.

SEC. 96.1.903.2 AUTOMATIC SPRINKLER SYSTEMS-WHERE REQUIRED.

Section 903.2 of the California Fire Code is revised to read:

903.2 Where required. Approved automatic fire sprinkler systems shall be installed in all new structures. For the purpose of fire sprinkler systems, buildings separated by less than 10 feet from adjacent buildings shall be considered one building. Fire barriers and partitions, regardless of rating, shall not be considered as creating separate buildings for purposes of determining fire sprinkler requirements. Mezzanines shall be included in the total square footage calculation.

Exceptions:

1. Group U occupancies not greater than 500 square feet, when the building is more than 20 feet from an adjacent structure or property line.

2. Accessory buildings/barns not greater than 1,000 square feet, and not otherwise considered enclosed buildings/structures, which are of ignition-resistant construction or as determined by the fire code official to not present a significant fire hazard.

3. Agricultural buildings constructed of wood or metal frames over which fabric or similar material is stretched, which are specifically used as green houses are exempt from the automatic sprinkler requirements unless physically connected to other structures.

903.2.1 Additions. An automatic fire sprinkler system may be required to be installed throughout structures when the addition is more than 50% of the existing building or when the altered building will exceed a fire flow as calculated pursuant to section 507.3. The fire code official may require an automatic sprinkler system to be installed in buildings where no water main exists to provide the required fire flow or where a special hazard exists, such as poor access roads, steep grades and canyon rims, hazardous brush and response times greater than 5 minutes by a fire department. The fire code official may require that other protective measures be taken based on existing conditions and/or potential hazards.

903.2.2 Remodels or reconstructions. The fire code official may require an automatic sprinkler to be installed throughout structures if a remodel or reconstruction includes significant modification to the interior or roof of the building and the cost of the installation of an automatic sprinkler system does not exceed 15 percent of the construction costs of the remodel or reconstruction, or require vacancy of the building. The fire code official may require that other protective measures be taken based on existing conditions and/or potential hazards.

AMENDMENT TO SECTION 903.2.

The Rincon Del Diablo Municiple Water District adopts the following code amendment:

Sec. 903.2.3 Commercial and Group U. An automatic sprinkler system installed in accordance with section 903.3 shall be required in buildings and structures where the required fire flow exceeds 1,500 gallons per minute as calculated per section 507.3. The fire code official may require an automatic sprinkler system be installed in buildings where no water main exists to provide the required fire flow or where a special hazard exists such as: poor access roads, grade and canyon rims, hazardous brush and response times greater than 5 minutes by a fire department.

Exception: Agricultural buildings constructed of wood or metal frames, over which fabric or similar material is stretched, which are specifically used as green houses are exempt from the automatic sprinkler requirements unless physically connected to other structures.

AMENDMENT TO SECTION 903.2.

The San Marcos Fire Protection District adopts the following code amendment:

17.64.180 Automatic Fire Extinguishing System. Section 903.2 of the California Fire Code is amended to read as follows:

An automatic fire extinguishing system shall be installed in occupancies and at locations as set forth in section 903.2 and listed in 17.64.190 and 17.64.200.

17.64.190 Automatic Fire Extinguishing Systems - Commercial. Section 903.2 of the California Fire Code is amended to read as follows:

An automatic fire extinguishing system shall be installed in *Group A, B, E, S, F & M* occupancies.

AUTOMATIC FIRE EXTINGUISHING SYSTEMS - COMMERCIAL

The Fire Chief shall require the installation of an automatic fire sprinkler system meeting California Building and Fire Code when any one of the following conditions exist:

(1) In all Group A, B, E, S, F & M, commercial buildings hereinafter constructed when the square footage exceeds 5,000 square feet or 34 feet in height.

(2) When Fire Department travel time exceeds five (5) minutes from the closest fire station to any building. (Time tests will be conducted by the Fire Department based on established testing procedures).

(3) When a structure is in the direct Urban Wildland Interface. (Refer to Community Zones Hazard Map).

(4) When a dead-end access road or cul-de-sac exceeds 600 feet. (Note: If a Fire Department-approved secondary access is provided to the dead-end access road or cul-de-sac, this condition will not apply).

(5) When the building's calculated fire flow requirement, based on building square footage and construction type, exceeds 2,500 G.P.M.

Exception: Greenhouses, buildings constructed for use as green houses, are exempt from fire sprinkler requirements unless physically connected to other structures.

"Fire Walls" (area or occupancy separation walls), shall be as identified in the B.C. International with no openings to create a separate building for the purpose of determining fire sprinkler requirements.

AMENDMENT TO SECTION 903.2 (Continued)

17.64.200 Automatic Fire Extinguishing Systems - Residential. Section 903.2 of the California Fire Code is amended by expanding its applicability to all Group R occupancies.

AUTOMATIC FIRE SPRINKLER SYSTEMS - RESIDENTIAL

The Fire Chief shall require the installation of an automatic fire sprinkler system in all residential buildings when any one of the following conditions exists:

(1) Residential buildings containing two (2) or more dwelling units hereinafter constructed exceeding 10,000 square feet, or exceeding 34 feet in height, shall be protected with a fire sprinkler system meeting NFPA Standard 13.

(2) Residential buildings containing two (2) or more dwelling units hereinafter constructed exceeding 5,000 square feet, but less than 10,000 square feet total area, or exceeding 34 feet in height shall be protected with a fire sprinkler system meeting NFPA Standard 13-R.

(3) Residential buildings containing one family dwelling unit in excess of 5,000 square feet or two or more dwelling units shall be protected by a fire sprinkler system meeting the NFPA Standard 13-D.

(4) When Fire Department travel time exceeds five (5) minutes from the closest fire station to any building. (Time tests will be conducted by the Fire Department based on established testing procedures).

(5) When the structure is in the direct Urban Wildland Interface. (Refer to Community Zones Hazard Map).

(6) When dead-end access road or cul-de-sac exceeds 600 feet, all buildings beyond the 600 feet will be equipped with automatic fire sprinklers. (**Note:** If an approved secondary fire access is provided to the dead-end, this condition shall not apply).

(7) When required fire flow for the building is insufficient.

Note: "Fire Walls" (area or occupancy separation walls), shall be as identified in the B.C. International with no openings to create a separate building for the purpose of determining fire sprinkler requirements.

(8) When a NFPA 13D or 13R automatic fire extinguishing system is required, a listed electric bell will be required.

AMENDMENT TO SECTION 903.2.

The San Miguel Protection District adopts the following code amendment:

Sec. 903.2.3 Commercial structures. Approved automatic fire sprinkler systems shall be installed in all commercial structures in excess of 3,000 square feet. For the purpose of fire sprinkler systems, buildings separated by less than 10 feet from adjacent buildings shall be considered one building. Fire barriers and partitions, regardless of rating, shall not be considered as creating separate buildings for purposes of determining fire sprinkler requirements. Mezzanines shall be included in the total square footage calculation.

Sec. 903.2.4 Change in occupancy group. A change of occupancy group in an existing building which results in a structure of 3,000 square feet or more, or which results in a fire flow of 1,500 gallons per minute determined by the provisions of Appendix B, or when calculated according to the standard published by the Insurance Services Office "Guide for Determination of Required Fire Flow". When fire sprinklers are required under change of occupancy group, this shall mean the entire structure(s) shall be equipped with fire sprinklers. The fire code official may require that other protective measures be taken based on existing conditions and/or potential hazards.

AMENDMENT TO SECTION 903.2.

The Vista Fire Protection District adopts the following code amendment:

Sec. 903.2 Where required. Approved automatic sprinkler systems in new buildings and structures shall be provided throughout all buildings hereinafter constructed of 5,000 square feet or more in total floor area; or when additions of more than 10% in square footage result in a structure of 5,000 or more square feet (mezzanines shall be included and occupancy separation walls shall not be considered as creating separate buildings); or in buildings built on or near a property line other than a public way where the distance from the property line is less than the sum of one-fifth the height, plus any overhang, plus five (5) feet; or in any building hereinafter constructed that requires a fire flow of 2,500 gallons per minute or more; or as described in sections 903.2.1 through 903.2.12.

Sec. 903.2.8 Group R residential and accessory structures. All residential occupancies and attached garages, carports, workshops and storage rooms hereinafter constructed shall have approved fire sprinkler systems installed and maintained.

Exception: An automatic residential fire sprinkler system shall not be required for additions or alterations to existing building that are not already provided with an automatic residential sprinkler system. Detached R occupancy buildings accessory to a single or two-family building intended for intermittent use and less than 500 square feet will not require fire sprinkler protection.

SEC. 96.1.903.4. SPRINKLER SYSTEM MONITORING AND ALARMS.

Section 903.4 of the California Fire Code is revised to read:

Sec. 903.4 Sprinkler system supervision and alarms. All valves controlling the water supply for automatic sprinkler systems, pumps, tanks, water levels and temperatures, critical air pressures and water-flow switches on all sprinkler systems shall be electronically supervised by a listed fire alarm control unit.

Exceptions:

1. Automatic sprinkler systems with less than 100 fire sprinklers protecting one-family and two-family dwellings.

2. Limited area systems serving fewer than 20 sprinklers.

3. Automatic sprinkler systems installed in accordance with NFPA 13R where a common supply main is used to supply both domestic water and the automatic sprinkler system and a separate shutoff valve for the automatic sprinkler system is not provided.

4. Jockey pump control valves that are sealed or locked in the open position.

5. Control valves to commercial kitchen hoods, paint spray booths or dip tanks that are sealed or locked in the open position.

6. Valves controlling the fuel supply to fire pump engines that are sealed or locked in the open position.

7. Trim valves to pressure switches in dry, preaction and deluge sprinkler systems that are sealed or locked in the open position.

SEC. 96.1.2808. STORAGE AND PROCESSING OF WOOD CHIPS, HOGGED MATERIAL, FINES, COMPOST AND RAW PRODUCT ASSOCIATED WITH YARD WASTE AND RECYCLING FACILITIES.

Section 2808 of the California Fire Code is revised to read:

SECTION 2808
STORAGE AND PROCESSING OF WOOD CHIPS, HOGGED MATERIALS, FINES, COMPOST AND RAW PRODUCT ASSOCIATED WITH YARD WASTE AND RECYCLING FACILITIES

Sec. 2808.1 General. The storage and processing (mulching, composting) of wood chips, hogged materials, fines, compost and raw product produced from yard waste, debris and recycling facilities shall be in accordance with section 2808.

Sec. 2808.2 Definitions. The following terms are defined in section 202:

AERATED STATIC PILE.
CHIPPING AND GRINDING.
COMPOSTING OPERATION.
GREENWASTE.
HOGGED MATERIALS.
MULCHING.
STATIC PILE.
WINDROW COMPOSTING PROCESS.
WOOD CHIPS.

Sec. 2808.3 Permit required. A permit shall be obtained from the fire code official prior to engaging in the operation and storing processed of wood chips, hogged material, fines, compost and raw product in association with yard waste and similar material recycling facilities. The permit shall be renewed on an annual basis or shall be limited to such period of time as designated by the fire code official. Permits shall not be transferable and any change in use, location, occupancy, operation or ownership shall require a new permit.

Sec. 2808.4 Financial assurance for cost recovery. A security bond, irrevocable letter of credit or other approved form of financial assurance shall be required to be posted, in an amount determined by the fire code official. The financial assurance shall be a minimum of $25,000.00 and a maximum of $100,000.00, depending on the size of operation. The financial assurance shall reimburse the fire department for expenses incurred in any emergency response and/or enforcement action by the fire department to protect the public from fire or hazardous substances related to the operation. The financial assurance shall be returned to the operator in a timely fashion once the operation is closed, to the satisfaction of the fire code official.

Sec. 2808.5 Operational and emergency plans. The following operational and emergency action plans shall be submitted to and be approved by the fire code official prior to initiating an operation under section 2808:

1. Operational Plan. The operational plan shall include: Site layout, pile dimensions, fire access, water supply, site security, site operations, temperature monitoring, rotation and diversion plan.

2. Emergency Plan. The emergency plan shall include: Operator fire response actions, fire dispersal area, emergency equipment operator callback and initiation of incoming diversion plan. All plans shall define the equipment necessary to process and handle the materials.

Sec. 2808.6 Notification of fire department. The operator shall report all fires to the fire department immediately upon discovery.

Sec. 2808.7 Equipment operator emergency callback. The operator shall implement and maintain a plan for rapid equipment operator response to the site. The maximum response time to the site shall be within one hour of a fire department notification. The following equipment shall be on site and staffed with skilled operators: bulldozer, loaders and heavy duty equipment necessary to mitigate a fire. Notification procedure shall be maintained operational 24 hours a day, seven days a week. Notification may be by pager activation, telephone answering service, or other approved means.

Sec. 2808.8 Incoming waste diversion plan. The operator shall develop a diversion plan for incoming greenwaste for implementation in the event of equipment failure or other inability to process and distribute greenwaste. The plan shall prevent stockpiling of waste on the site and unauthorized depositing of waste on or near the site. The operator shall initiate the diversion plan based on criteria in the Operational and Emergency Plan without further direction from the fire department.

Sec. 2808.9 Unprocessable or non-greenwaste material. All greenwaste that cannot be processed on-site, such as stumps and fibrous plants, shall be immediately removed from the feedstock, stored in roll-off containers or bins and be removed from the facility on a weekly basis. All plastic bags shall be removed prior to shredding material.

Sec. 2808.10 Fire access roadway. A fire access roadway shall be provided to the site and on the site. Each roadway shall be at least 20 feet wide, but the fire official may require a greater width, depending on site conditions. The operator shall also be required to obtain the fire code official's approval for the type of driving surface for the onsite access roadway.

Sec. 2808.11 Storage sites. Storage sites shall be level and on solid ground or other approved all-weather surface.

Sec. 2808.12 Combustible vegetation control. The operator shall clear any combustible material, weeds, brush, trees or other vegetation (including mulch) that is or may become, dry and capable of transmitting fire, from within 50 feet of raw greenwaste and mulch piles. Clearance shall be to bare earth or approved pavement. Individual growing trees within that distance may remain, subject to the fire code official's approval.

Sec. 2808.13 Pile separation. Piles shall be separated from adjacent piles and property lines by fire department access roadways.

Sec. 2808.14 Size of piles. Pile height, width and length shall be limited to criteria approved by the fire code official, based in part on the site material handling equipment. In no case shall a pile exceed 12 feet in height, 100 feet in width and 200 feet in length.

Sec. 2808.15 Static pile protection. Interior pile temperatures shall be monitored and recorded on a regular basis per the Operational Plan. Internal pile temperatures shall be taken at ⅔ the pile height, 12 to 24 inches from the surface with a probe-type thermometer. Readings shall be made at not greater than 50-foot intervals along the length of the pile. Temperatures above 158° F are known to adversely affect microbial decomposition and are considered excessive. Infrared thermometers may be used to monitor for hot spots at the surface, but are not a substitute for internal probe measurement and documentation. Once windrows exceed 170° F, the windrows shall be reduced in size, be rotated and be monitored daily until temperatures drop below 158° F. All greenwaste stockpiles shall be re-mixed as necessary to alleviate any fire due to spontaneous combustion or temperatures above 170° F. Windrows shall be visually inspected on a regular basis. Once fires have been detected in any windrows at a site, this visual inspection shall be a minimum daily requirement. Daily inspections shall continue until the threat of fire no longer exists and the fire code official agrees inspections may be discontinued. All temperature and pile-handling records shall be kept on file at the site and be made available for inspection by fire department personnel. Data shall include date, time, temperature, specific location and person conducting measurement.

Sec. 2808.16 Firefighting water supplies and storage. Firefighting water supplies shall conform to sections 2808.16.1 or 2808.16.2.

Sec. 2808.16.1 Public water supply. The operator shall provide and maintain approved fire hydrants and waterline mains as required by the fire code official. Water lines may be approved aboveground lines supplied from a reliable water supply with adequate protection against impact and fire flow reaction. Hydrant spacing shall be at 400-foot intervals along primary fire access roadways. Fire flow at each hydrant shall be least 1000 gallons per minute at 20 psi. Duration of the required fire flow shall be as determined by the fire code official.

Sec. 2808.16.2 Private water supply. Above-ground water storage tanks may be installed when authorized by the fire code official where public water supply is not adequate to meet fire flow requirements. Volume and duration of the required fire flow shall be as determined by the fire code official.

Sec. 2808.17 Material-handling equipment. Equipment used on all piles should be of a type that minimizes compaction. All vehicles operating on or around the piles shall have a Class A fire extinguisher of a minimum 2-A rating, in addition to the Class B rating appropriate for the vehicles. Approved material-handling equipment shall be available during fire fighting operations for moving wood chips, hogged material, compost and raw product produced from yard waste and wood fines.

Sec. 2808.18 General safety rules for site equipment maintenance. Welding or cutting torch operations shall be conducted a minimum of 30 feet from combustible materials. A fire watch shall be provided to detect fire, and to operate fire-extinguishing equipment throughout the welding or cutting operation and 30 minutes thereafter. Refueling and on-site maintenance shall meet California Fire Code requirements in Chapters 23 & 57 and all other applicable fire code requirements.

Sec. 2808.19 Site security. Pile storage areas shall be surrounded with approved fencing. Fences shall be a minimum of 6 feet in height.

Sec. 2808.20 Smoking and open burning prohibited. The operator shall prohibit smoking and open flame on the operational site, including smoking within vehicles. Approved signs shall be clearly and prominently posted, and shall be enforced by the site operators. No open burning shall be allowed on site.

SEC. 96.1.3206.2. GENERAL FIRE PROTECTION AND LIFE SAFETY FEATURES.

Section 3206.2 Exception J of Table 3206.2 of the California Fire Code is deleted.

SEC. 96.1.3318. FUEL MODIFICATION ZONE REQUIREMENTS

Section 3318 is added to the California Fire Code to read:

3318
FUEL MODIFICATION ZONE REQUIREMENTS

Sec. 3318.1 Fuel modification zone during construction. Any person doing construction of any kind which requires a permit under this code or the County Building Code shall install a fuel modification zone prior to allowing any combustible material to arrive on the site and shall maintain the zone during the duration of the project.

SEC. 96.1.4902. DEFINITIONS.

Section 4902 of the California Fire Code is revised to read:

SECTION 4902
DEFINITIONS

Sec. 4902.1 General. For the purposes of this chapter, certain terms are defined as follows:

BUILDING OFFICIAL means the Director of the Planning and Development Services or any person appointed or hired by the Director to administer or enforce the County's planning and construction standards. The building official duties shall include plan checking, inspections and code enforcement.

CDF DIRECTOR means the Director of the California Department of Forestry and Fire Protection.

COMBUSTIBLE VEGETATION means material that in its natural state will readily ignite, burn and transmit fire from native or landscape plants to any structure or other vegetation. Combustible vegetation includes dry grass, brush, weeds, litter or other flammable vegetation that creates a fire hazard.

DEFENSIBLE SPACE is an area either natural or man-made, where material capable of allowing a fire to spread unchecked has been treated, cleared or modified to slow the rate and intensity of an advancing wildfire and to create an area for fire suppression operations to occur. Distance measurements for defensible space shall be measured on a horizontal plane.

FIRE HAZARD SEVERITY ZONES are geographical areas designated pursuant to California Public Resources Code sections 4201 through 4204 and classified as Very High, High and Moderate in State Responsibility Areas or as Local Agency Very High Fire Hazard Severity Zones designated pursuant to California Government Code sections 51175 through 51189.

The California Code of Regulations, Title 14, Section 1280 entitles maps of these geographical areas as "Maps of the Fire Hazard Severity Zones in the State Responsibility Area of California."

FIRE PROTECTION PLAN (FPP) is a document prepared for a specific project or development proposed in the wildland-urban interface fire area that describes ways to minimize and mitigate potential loss from wildfire exposure, with the purpose of reducing impact on the community's fire protection delivery system.

FUEL BREAK is an area, strategically located for fighting anticipated fires, where the native vegetation has been permanently modified or replaced so that fires burning into it

can be more easily controlled. Fuel breaks divide fire-prone areas into smaller areas for easier fire control and to provide access for fire fighting.

LOCAL AGENCY VERY HIGH FIRE HAZARD SEVERITY ZONE means an area designated by a local agency upon the recommendation of the CDF Director pursuant to Government Code sections 51177(c), 51178 and 51189 that is not a State Responsibility Area and where a local agency, city, county, city and county, or district is responsible for fire protection.

OPEN SPACE EASEMENT means any right or interest in perpetuity or for a term for years in open-space land, as that term is defined in Government Code section 51051, acquired by the County, a city or a nonprofit organization where the instrument granting the right or interest imposes restriction on use of the land, to preserve the land for public use or enjoyment of the natural or scenic character of the land.

OPEN SPACE PRESERVE means open-space land, as that term is defined in Government Code section 65560(b), for the preservation of natural resources, managed production of resources, outdoor recreation, public health and safety, buffer for a military installation or the protection of cultural resources.

SLOPE is the variation of terrain from the horizontal; the number of feet, rise or fall per 100 feet, measured horizontally, expressed as a percentage.

STATE RESPONSIBILITY AREA means lands that are classified by the Board of Forestry pursuant to Public Resources Code section 4125 where the financial responsibility of preventing and suppressing forest fires is primarily the responsibility of the State.

TREE CROWN means the primary and secondary branches growing out from the main stem, together with twigs and foliage.

WILDFIRE is any uncontrolled fire spreading through vegetative fuels that threaten to destroy life, property, or resources as defined in Public Resources Code sections 4103 and 4104.

WILDFIRE EXPOSURE is one or a combination of radiant heat, convective heat, direct flame contact and burning embers being projected by vegetation fire to a structure and its immediate environment.

WILDLAND-URBAN INTERFACE FIRE AREA is a geographical area identified by the state as a "Fire Hazard Severity Zone" in accordance with the Public Resources Code sections 4201 through 4204 and Government Code sections 51175 through 51189, or other areas designated by the enforcing agency to be at a significant risk from wildfires.

AMENDMENT TO SECTION 4902.2.

The Alpine, Bonita-Sunnyside, Deer Springs, North County, Ramona, Rancho Santa Fe, Rincon Del Diablo, San Miguel, Valley Center Fire Protection Districts adopt the following code amendment:

Sec. 4902.2 Declaration: The legislative body shall declare the Wildland Interface Areas within the jurisdiction. The Wildland Urban Interface Areas shall be based on the findings of fact. The Wildland Urban Interface Area boundary shall be any geographic area mapped or otherwise identified by the State or local jurisdiction as a High Hazard, or Very High Fire Severity Zone, or as set forth by the (insert fire district name). When the type and condition of vegetation, topography, weather, and structure density, which potentially increases the probability of vegetation conflagration, exists, such area shall be considered a Very High Fire Severity Zone.

SEC. 96.1.4903. FIRE PROTECTION PLAN.

Section 4903 of the California Fire Code is revised to read:

SECTION 4903
FIRE PROTECTION PLAN

Sec. 4903.1 When required. Planning and Development Services or the FAHJ may require an applicant for a parcel map, subdivision map, specific plan or major use permit for any property located in a wildland-urban interface fire area to submit a Fire Protection Plan (FPP) as part of the approval process.

Sec. 4903.2 Content. The FPP shall consider location, topography, geology, aspect, combustible vegetation (fuel types), climatic conditions and fire history. The plan shall address the following in terms of compliance with applicable codes and regulations including but not limited to: water supply, vehicular and emergency apparatus access, travel time to nearest serving fire station, structural ignitability, structure set back, ignition-resistive building features, fire protection systems and equipment, impacts to existing emergency services, defensible space and vegetation management.

The FPP shall be prepared as prescribed in the County of San Diego Land Use and Environment Group “Guidelines for Determining Significance and Report Format and Content Requirements for Wildland Fire and Fire Protection” document.

SEC. 96.1.4905. WILDFIRE PROTECTION BUILDING CONSTRUCTION.

Section 4905 of the California Fire Code is revised to read:

SECTION 4905
WILDFIRE PROTECTION BUILDING CONSTRUCTION

Sec. 4905.1 Construction methods for exterior wildfire exposure. The construction methods for exterior wildfire exposure in a wildland-urban interface fire area shall be as provided in Chapter 7A of the County Building Code.

SEC. 96.1.4907. DEFENSIBLE SPACE.

Section 4907 of the California Fire Code is revised to read:

SECTION 4907
DEFENSIBLE SPACE

Sec. 4907.1 Structure setbacks from property lines. The building official shall establish the minimum setbacks for locating a structure on a lot in a wildland-urban interface fire area. The setbacks may be greater than the minimum setbacks provided in the County Zoning Ordinance, when necessary to protect a structure from an unreasonable hazard from a wildfire.

Sec. 4907.1.1 General fire setbacks. Buildings and structures shall be setback a minimum of 30 feet from property lines and biological open space easements unless the County Zoning Ordinance requires a greater minimum. When the property line abuts a roadway the setback shall be measured from the centerline of the roadway.

> **Exception:** When both the building official and the FAHJ determine that the hazard from a wildland fire is not significant or when the terrain, parcel size or other constraints on the parcel make the required setback infeasible, the building official may allow the setback to be less than 30 feet when allowed by the Zoning Ordinance.

Sec. 4907.1.2 Fire setbacks adjacent protected areas. Buildings and structures shall be setback a minimum of 100 feet from any property line adjacent a national forest, state park or open space preserve. This setback may be reduced when additional mitigation measures are employed that are satisfactory to both the FAHJ and the building official.

AMENDMENT TO SECTION 4907.1.3.

The Alpine, Bonita-Sunnyside, Deer Springs, North County, Ramona, Rancho Santa Fe, Rincon Del Diablo, San Miguel, Valley Center Fire Protection Districts adopt the following code amendment:

Sec. 4907.1.3 Structure setback from slope. Single-story structures shall be setback a minimum 15 feet horizontally from top of slope to the farthest projection from a roof. A single-story structure shall be less than 12 feet above grade. A two-story structure shall be setback a minimum of 30 feet horizontally from top of slope to the farthest projection from a roof. Structures greater than two stories may require a greater setback when the slope is greater than 2 to 1.

Sec. 4907.2 Fuel modification. A fuel modification zone shall be required around every building that is designed primarily for human habitation or use or a building designed specifically to house farm animals. Decks, sheds, gazebos, freestanding open-sided shade covers and similar accessory structures less than 250 square feet and 30 feet or more from a dwelling, and fences more than 5 feet from a dwelling, are not considered structures for the establishment of a fuel modification zone. A fuel modification zone shall comply with the following:

(a) When a building or structure in a hazardous fire area is located 100 feet or more from the property line, the person owning or occupying the building or structure shall maintain a fuel modification zone within 100 feet of the building or structure. The area within 50 feet of a building or structure shall be cleared of vegetation that is not fire resistant and re-planted with fire-resistant plants. In the area between 50 to 100 feet from a building, all dead and dying vegetation shall be removed. Native vegetation may remain in this area provided that the vegetation is modified so that combustible vegetation does not occupy more than 50% of the square footage of this area. Weeds and annual grasses shall be maintained at a height not to exceed 6 inches. The chips from chipping of vegetation that is done on-site may remain if the chips are dispersed so they do not exceed 6 inches in depth. Trees may remain in both areas provided that the horizontal distance between crowns of adjacent trees and crowns of trees and structures is not less than 10 feet. See Figure 4907.2.

(b) When a building or structure in a hazardous fire area is setback less than 100 feet from the property line, the person owning or occupying the building or structure shall meet the requirements in subsection (a) above, to the extent possible, in the area between the building or structure and the property line.

(c) The building official and the FAHJ may provide lists of prohibited and recommended plants.

(d) The fuel modification zone shall be located entirely on the subject property unless approved by the FAHJ. This required fuel modification zone may be reduced as allowed in subsection (b) above or increased as required by a fire protection plan.

(e) When the subject property contains an area designated to protect biological or other sensitive habitat or resource, no building or other structure requiring a fuel modification zone shall be located so as to extend the fuel modification zone into a protected area.

FIGURE 4907.2 MEASUREMENTS OF FUEL MODIFICATION DISTANCE

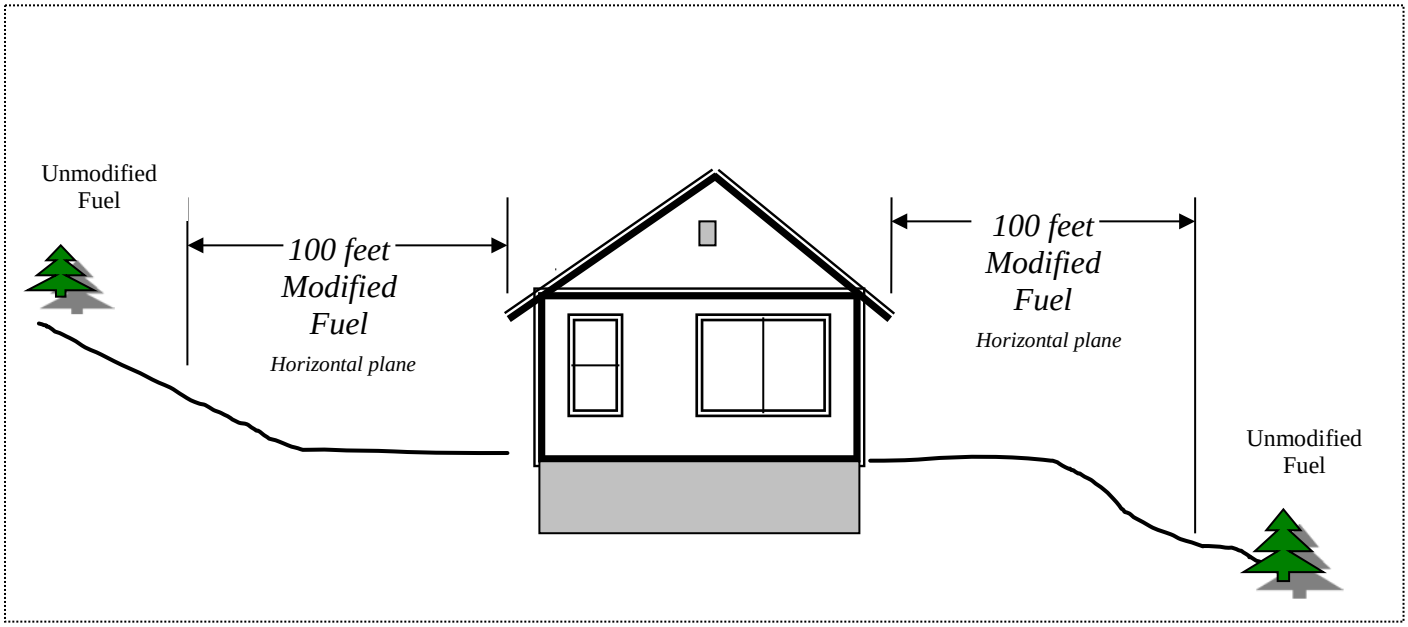

AMENDMENT TO SECTION 4907.2.

The San Marcos Fire Protection District adopts the following code amendment:

Sec 4907.2 Fuel modification. A person owning, leasing, controlling, operating or maintaining a building or structure in or adjoining a hazardous fire area, and a person owning, leasing or controlling land adjacent to a building or structure in or adjoining a hazardous fire area shall maintain an effective fuel modification zone by removing, clearing or modifying combustible vegetation and other flammable materials from areas within 150 feet from each building or structure. The fuel modification zone may be replanted with either approved irrigated, fire-resistant planting material or approved non-irrigated, drought-tolerant, fire-resistant plant material. Replanting of the fuel modification zone may be required for erosion control.

Exceptions:

1. Single specimens of trees, ornamental shrubbery or similar plants used as ground cover, provided that they do not form a means of rapidly transmitting fire from the native growth to any structure.
2. Grass and other vegetation located more than 30 feet from a building or structure and less than 18 inches in height need not be removed where necessary to stabilize the soil and prevent erosion.
3. With the approval of the FAHJ, the width of the fuel modification zone may be reduced where ignition-resistant structures or other features are constructed. However, in no case shall the fuel modification zone be reduced to less than 100 feet. This exception shall not be construed to allow the FAHJ to require ignition-resistant construction on an existing structure with a fuel modification zone of less than 100 feet.

Sec. 4907.2.1 Fuel modification of combustible vegetation from sides of roadways. The FAHJ may require a property owner to modify combustible vegetation in the area within 20 feet from each side of the driveway or a public or private road adjacent to the property to establish a fuel modification zone. The FAHJ has the right to enter private property to insure the fuel modification zone requirements are met.

Exception: The FAHJ may reduce the width of the fuel modification zone if it will not impair access.

Sec. 4907.2.2 Community fuel modification. The FAHJ may require a developer, as a condition of issuing a certificate of occupancy, to establish one or more fuel modification zones to protect a new community by reducing the fuel loads adjacent to a community and structures within it. The developer shall assign the land on which any fuel modification zone is established under this section to the association or other

common owner group that succeeds the developer as the person responsible for common areas within the community.

Sec. 4907.2.2.1 Land ownership. Once a fuel modification zone has been established under section 4907.2.2 the land on which the zone is located shall be under the control of an association or other common ownership established in perpetuity, for the benefit of the community to be protected.

Sec. 4907.3 Maintenance of defensible space. Any person owning, leasing, controlling, operating or maintaining a building or structure required to establish a fuel modification zone pursuant to section 4907.2 shall maintain the defensible space. The FAHJ may enter the property to determine if the person responsible is complying with this section. The FAHJ may issue an order to the person responsible for maintaining the defensible space directing the person to modify or remove non-fire resistant vegetation from defensible space areas, remove leaves, needles and other dead vegetative material from the roof of a building or structure, maintain trees as required by section 4907.3.1 or to take other action the FAHJ determines is necessary to comply with the intent of sections 4903 et seq.

Sec. 4907.3.1 Trees. Crowns of mature trees located within defensible space shall maintain a minimum horizontal clearance of 10 feet for fire resistant trees and 30 feet for non-fire resistive trees. Mature trees shall be pruned to remove limbs to maintain a vertical separation of three times the height of the lower vegetation or 6 feet, whichever is less, above the ground surface adjacent to the trees. Dead wood and litter shall be regularly removed from trees. Ornamental trees shall be limited to groupings of 2-3 trees with canopies for each grouping separated horizontally as described in Table 4907.3.1.

TABLE 4907.3.1
DISTANCE BETWEEN TREE CANOPIES

Distance between Tree Canopies by Percent Slope	
Percent of Slope	**Required Distances Between Edge of Mature Tree Canopies (1)**
0 to 20	**10 feet**
21 to 40	**20 feet**
41 plus	**30 feet**

1. Determined from canopy dimensions as described in Sunset Western Garden Book (Current Edition)

AMENDMENT TO SECTION 4907.3.2.

The Alpine, Rancho Santa Fe, Rincon Del Diablo, San Miguel and Vista Fire Protection Districts adopt the following code amendment:

Sec. 4907.3.2 Orchards, groves or vineyards. All orchards, groves and vineyards shall be kept in a healthy state and free of combustible debris and vegetation, including dead or downed trees. A 10-foot firebreak shall be cleared around the perimeter of any orchard, grove or vineyard. Dead grasses between rows of trees or vines shall be mowed.

AMENDMENT TO SECTION 4907.3.3.

The Rancho Santa Fe, Rincon Del Diablo, and San Miguel Fire Protection Districts adopt the following code amendment:

Sec. 4907.3.3 Eucalypyus forests and oak woodlands. All forests and woodlands shall be kept in a healthy state and maintained as described below. The forest or woodlands shall be free of all dead, dying, or diseased trees (excluding tree stumps no higher than six inches above the ground). Dead, dying, or diseased trees shall include insect infested trees, no longer living, in the last stages of growth or infected by a pathogen of any type. If combustible vegetation is located underneath a tree's drip line, the lowest branch shall be at least three times as high as the understory brush or grasses, or ten feet, whichever is greater. This will reduce the build-up of "ladder" fuels. Firewood shall be neatly stacked and shall have a minimum of 30 feet of clearance (no vegetation) around the entire firewood storage area. Debris and trimmings produced by the removal process shall be removed from the site, or if left, shall be converted into mulch by a chipping machine and evenly dispersed to maximum depth of six inches.

AMENDMENT TO SECTION 4907.4.

The Ramona, Rancho Santa Fe, and Rincon Del Diablo Fire Protection Districts adopt the following code amendment:

Sec. 4907.4 Landscape plans. New residential custom homes, production tract homes, multi-family residential and commercial buildings shall submit landscape plans to the (insert fire district name) and obtain approval for the plan prior to the framing inspection. Landscape plan submittals shall include a readable scale, the delineation of a 100-foot fuel modification zone, depiction of existing vegetation, all irrigated areas, a plant legend with both botanical and common names and identification of all plant material symbols.

Sec. 4907.4.1 Landscaping requirements. All plant materials used shall be from the Wildland/Urban Interface Development Standards plant palette. The addition of plant material to the approved list will be at the discretion of the (insert fire district name). Landscape plans shall be in accordance with the following:

1. All non-fire resistive trees, including conifers, pepper trees, eucalyptus and acacia species, shall be planted and maintained so that the tree's drip line at maturity is a minimum of 30 feet from any combustible structure. All fire resistive tree species shall be planted and maintained at a minimum of 10 feet from the tree's drip line to any combustible structure.
2. For streetscape plantings, all non-fire resistive trees shall be planted so that the center of the tree trunk is 20 feet from edge of curb. Fire resistive trees may be planted 10 feet from edge of curb to center of tree trunk. Care should be given to the type of tree selected so that it will not encroach into the right-of-way or produce a closed canopy effect.
3. Trees and large shrubs shall be limited to groups of two to three trees with mature foliage of any group separated horizontally by at least 10 feet if planted on less than a 20 percent slope and 20 feet if planted on greater than a 20 percent slope.
4. If shrubs are located underneath a tree's drip line, the lowest branch should be at least three times as high as the understory shrubs or 10 feet, whichever is greater.
5. Existing trees may be pruned 10 feet away from roof, eave or exterior siding, depending on the tree's physical or flammable characteristics and a building's construction features.
6. All tree branches and palm fronds shall be removed within 10 feet of a fireplace chimney or outdoor barbecue.

Sec. 4907.4.2 Landscaping installation. All landscaping shall be installed prior to final inspection for issuance of certificate of occupancy.

SEC. 96.1.5601.2. EXPLOSIVES AND FIREWORKS-APPLICABILITY.

Section 5601.2 is added to the California Fire Code to read:

Sec. 5601.2 Applicability. This section shall apply to the manufacture, possession, storage, sale, transportation and use of explosives and blasting agents and to any blasting operation in the unincorporated area of the County. The Sheriff is the Issuing Officer for

purposes of this section. The Sheriff may delegate the duties of Issuing Officer at her or his discretion. Additionally, as may be appropriate based on circumstances, the Issuing Officer may enter into memoranda of agreement with non-County fire agencies whereby such non-County agency will assume the duties of issuing a permit or permits required by this Chapter. The Issuing Officer shall determine whether a blast is a major blast or a minor blast under this section. A minor blast is subject to all conditions of this section except the inspection requirements.

Sec. 5601.2.1 Definitions. The following terms are defined in section 202:

BLASTER.
BLASTING AGENT.
BLASTING OPERATION.
BLASTING PERMIT.
BLAST SITE.
EXPLOSIVES PERMIT.
INSPECTOR.
MAJOR BLASTING.
MINOR BLASTING.

Sec. 5601.2.2. Application. Application for a permit required by this section shall be in the form required by the Issuing Officer.

Sec. 5601.2.3 Permit requirements. No person shall conduct blasting in the unincorporated area of the County without an explosives permit issued under this chapter. A person applying for an explosives permit shall, in addition to demonstrating compliance with fire safety requirements, shall also comply with all County requirements for any building permits, grading permits, use permits, encroachment permits and all other entitlements to use property, including zoning requirements and any determination under the Zoning Ordinance of nonconforming status. The applicant shall be responsible for providing proof of all necessary approvals when requested by the Issuing Officer.

AMENDMENT TO SECTION 5601.2.3.1.

The Deer Springs, North County, Rincon Del Diablo, San Marcos, San Miguel, Valley Center and Vista Fire Protection Districts adopt the following code amendment:

Sec. 5601.2.3.1 Blasting permit required. In addition to obtaining an explosives permit, no person shall conduct blasting without first obtaining a blasting permit. The applicant shall be responsible for providing proof of all necessary approvals when requested by the Issuing Officer.

Sec. 5601.2.4 Permit conditions. The Issuing Officer may impose conditions and procedures as are deemed reasonably necessary to protect the public health and safety based upon the facts and circumstances of a particular blasting operation. The permit conditions shall be in writing. Failure to comply with any permit condition is grounds for revocation of the permit. A blaster may request the Issuing Officer release the blaster from any permit condition if circumstances have changed that make the condition no longer applicable. In addition to complying with the County blasting regulations, a blaster shall also comply with blasting regulations of neighboring jurisdictions, for any blasting operations outside of the unincorporated area of the County conducted in conjunction with a project within the unincorporated areas of the County.

Sec. 5601.2.5 Insurance and indemnification required. As an additional condition for obtain an explosives permit the applicant shall submit: (1) a certificate of insurance evidencing that the blaster has obtained a general liability insurance policy which includes coverage for explosion, collapse and underground property damage from an insurer satisfactory to the Issuing Officer, that is in effect for the period covered by the permit, written on an "occurrence" basis, in an amount of not less than $500,000 per each occurrence, naming the County and the FAHJ as an additional insured and providing that the policy will not be canceled or terminated without 30 days prior written notice to the County and (2) an agreement signed by the blaster agreeing to defend, indemnify and hold the County and its agents, officers and employees harmless from any claims or actions arising from the issuance of the permit or any blasting activity conducted under the permit.

Sec. 5601.2.6 Blasting hours. Blasting shall only be allowed Monday through Saturday, between the hours of 7:00 a.m. and 6:00 p.m. or ½ hour before sunset, whichever occurs first, unless special circumstances warrant another time or day and the Issuing Officer grants approval of the change in time or day.

Sec. 5601.2.7 Additional operational requirements. The owner of any property in the unincorporated area of the County on which any blasting is intended to occur, shall give, or cause to be given, a one-time notice in writing, for any proposed blasting to the local fire agency and dispatch center and to all residences, including mobilehomes, and businesses within 600 feet of any potential major blast location or 300 feet from any potential minor blast location. The notice shall be given not less than 24 hours, but not more than one week, before a blasting operation and shall be in a form approved by the Issuing Officer. The minimum 24-hour notice requirement may be reduced to a lesser period but not less than one hour if the Issuing Officer determines that special circumstances warrant the reduction in time. Adequate precautions shall be taken to reasonably safeguard persons and property before, during and after blasting operations. These precautions shall include:

1. The blaster shall retain an inspector to inspect all structures, including mobilehomes, within 300 feet of the blast site before blasting operations, unless inspection is waived by the owner and/or occupant. The inspector shall obtain permission of the owner and/or occupant before conducting the inspection. The inspection shall be only for the purpose of determining the existence of any visible or reasonably recognizable preexisting defects or damages in any structure. Waiver of inspection shall be in writing signed by the owner and/or occupant. Refusal to allow inspection shall also constitute a waiver. The inspector shall notify the owner and/or occupant of the consequences of refusing an inspection shall include a refusal in the summary report filed with the Issuing Officer. The blaster shall request an inspector conduct post-blast inspections upon receipt of a written complaint of property damage if the complaint is made within 60 days of completion of blasting operations. If the blaster has knowledge of alleged property damage independent of the written complaint, the blaster shall also retain an inspector to conduct a post-blast inspection.

2. An inspector shall complete and sign pre-blast inspection reports identifying all findings and inspection waivers. The blaster shall retain the inspection reports for three years from the date of the blasting and upon a complaint of alleged damage the blaster shall immediately file a copy of the report with the Issuing Officer and provide a copy to the complainant. If there is a change in the blasting contractor after blasting has commenced on a project, a re-inspection shall be conducted in accordance with the preceding paragraph before the new blasting contractor undertakes any additional blasting.

3. The blaster shall retain an inspector to conduct a post-blast inspection of any structure for which a written complaint alleging blast damage has been received. A written report of the inspection shall be immediately filed with the Issuing Officer and provided to any person who made a complaint for damages.

4. The blaster shall allow any representative of the Issuing Officer to inspect the blast site and blast materials or explosives at any reasonable time.

5. If the blaster wants a representative of the Issuing Officer to witness a blasting operation the blaster shall make a request with the Issuing Officer at least 12 hours before the blast. The blaster shall confirm the request for a witness with the Issuing Officer at least one hour before the blast. The blaster shall be responsible for any cost incurred by the Issuing Officer in having a representative witness the blast.

6. The blaster shall notify the Issuing Officer on the day of a scheduled blasting operation not less than one hour before blasting.

7. All major blasting operations shall be monitored by an approved seismograph located at the nearest structure within 600 feet of the blasting operation. All daily seismograph reports shall be maintained by the blaster for three years from the blasting.

Sec. 5601.2.8 Seizure of illegal items. The Issuing Officer may seize at the owner's expense, all explosives, ammunition or blasting agents, which are illegally manufactured, sold, offered or exposed for sale, delivered, stored, possessed or transported in violation of this chapter.

Sec. 5601.2.9 Violations for false or misleading information. It shall be unlawful and a violation of this chapter for any person to provide false or misleading information or documentation to the County or any of its officers or employees or to any fire department, fire protection district, fire company or legally formed volunteer fire department, or its officers or employees in the unincorporated area of the County, having jurisdiction over any aspect of the explosives or blasting permit process or blasting operations.

Sec. 5601.2.10 Fees. A person applying to the Issuing Officer to be approved as a blaster or inspector, as defined in this section, shall pay an application fee to the Issuing Officer. A person applying for an explosives permit under this section shall pay the fee established by the Issuing Officer with the application. The amount of any fee required by this chapter shall be determined by the Issuing Officer on the basis of the full costs involved in processing an application.

SEC. 96.1.5608.1. FIREWORKS DISPLAY.

Section 5608.1 of the California Fire Code is revised to read:

Sec. 5608.1 General. Outdoor fireworks displays, use of pyrotechnics before a proximate audience and pyrotechnic special effects in motion picture, television, theatrical and group entertainment productions shall comply with California Code of Regulations, Title 19, Chapter 6 and County Code sections 32.101 et seq. The Fire Warden is the Issuing Officer for any fireworks permit required by this Chapter. The Fire Warden may delegate the duties of Issuing Officer at her or his discretion. Additionally, as may be appropriate based on circumstances, the Issuing Officer may enter into memoranda of agreement with non-County fire agencies whereby such non-County agency will assume the duties of issuing a permit or permits required by this Chapter.

Sec. 5608.1.1 Scope. The possession, manufacture, sale, storage, use and display of fireworks are prohibited in the unincorporated area of the County except as provided in County Code sections 32.101 et seq.

SEC. 96.1.5705.2.4. TRANSFERRING CLASS I, II OR III LIQUIDS.

Section 5705.2.4 of the California Fire Code is revised to read:

Sec. 5705.2.4 Transferring Class I, II or III liquids. Class I or II liquids or Class III liquids that are heated up to or above their flash points shall be transferred by one of the following methods:

1. From safety cans complying with UL 30.

2. Through an approved closed piping system.

3. From containers or tanks by an approved pump taking suction through an opening in the top of the container or tank.

4. Approved engineered liquid transfer system.

Exception: Liquids in containers not exceeding a 5.3-gallon (20 L) capacity.

SEC. 96.1.5706.2.5.2.. TANKS FOR GRAVITY DISCHARGE.

Section 5706.2.5.2.1 of the California Fire Code is added to read:

Sec. 5706.2.5.2.1 Limitations on tanks for gravity discharge. Gravity dispensing of Class I or II liquids or Class III liquids that are heated up to or above their flash points is prohibited. Dispensing devices for flammable and combustible liquids shall be of an approved type. Approved pumps taking suction from the top of the tank shall be used. Flammable or combustible liquids shall not be dispensed by a device that operates through pressure within a storage tank. Air or oxygen shall not be used to pressurize an aboveground tank.

SEC. 96.1.5706.2.8.2 PROHIBITION ON USE OF TANK VEHICLE.

Section 5706.2.8.2 is added to the California Fire Code to read:

Sec. 5706.2.8.2. Tank vehicle as a substitute for permanent tank prohibited. The use of a tank vehicle in a stationary manner as a substitute for an approved above-ground or below-ground fuel tank is prohibited.

SEC. 96.1.6107.5. SAFETY PRECAUTIONS AND DEVICES-SECURING LPG TANKS.

Section 6107.5 is added to the California Fire Code to read:

Sec. 6107.5 Securing LPG tanks. When required by the FAHJ, LPG tanks shall be secured to prevent the tank from rolling or moving.

SEC. 96.1.8001. REFERENCED STANDARDS.

Section 8001 is added to the California Fire Code to read:

Sec. 8001. Referenced standard NFPA 13D. Amended sections as follows:

Revise 5.1.1.1 to read as follows:

5.1.1.1 Spare sprinkler heads. Spare fire sprinkler heads (one of each type or as approved by the FAHJ) wrench, operation and maintenance instructions shall be provided in the vicinity of the riser.

Add a new 7.1.5 to read as follows:

7.1.5 Pressure-regulating valve. When available system water pressure exceeds 150 psi, a pressure-regulating valve acceptable to the FAHJ shall be installed before the system riser. Such valves shall be adjusted to restrict the outlet pressure to a maximum of 150 psi at any flow or no flow. When such valves are installed submittal documents must include manufacturer information sheets along with charts showing the dimensions (size) and flow characteristics inlet and outlet pressures at various flows for the type of valve being installed, and the valve shall be included in the design calculations.

Exception: At the discretion of the FAHJ the contractor may install an acceptable pressure relief valve, piped to the system main drain, set to relieve the pressure at 175 psi, provided the available supply pressure does not exceed 175 psi.

The Rancho Santa Fe Fire Protection District revises the following section to read as follows:

7.2.5 Inspector Test. Each sprinkler system shall have a ½" or larger test connection with a threaded keyless valve. The valve shall be remote to the riser, located on the building exterior about five 5 feet above final grade and shall be remote from the riser. It shall be labeled with a permanent plate with minimum ¼" lettering, contrasting with background, and stating: "INSPECTOR TEST". (Pre-assembled riser assemblies with a built-in Drain/Test valve shall not be accepted for inspector test valve unless approved by the FAHJ.)

Add a new 7.3.3 to read as follows:

7.3.3 Pressure gauge. An approved 300 psi pressure gauge shall be permanently installed at the riser.

Revise 7.6 to read as follows:

7.6 Alarms. A water flow switch shall be provided and located on the sprinkler riser above the check valve and main drain and shall actuate an audible fire alarm signal bell. The water flow switch shall be a retarding type with a delay between 15-60 seconds before activation of the signal bell. Alarm bell shall have a minimum diameter of 8 inches and be mounted on the exterior in the vicinity of the master bedroom. The alarm bell shall be clearly audible in all bedrooms with intervening doors closed.

Revise 8.3.2 to read as follows:

8.3.2. Sprinklers are not required in bathrooms where the area does not exceed 55 sq. ft. unless there is door exiting directly to the outside, and the walls and ceilings including behind fixtures, are of noncombustible or limited combustible materials providing a fifteen-minute thermal barrier.

The Rancho Santa Fe Fire Protection District revises or adds the following sections to read as follows:

8.3.3. Sprinklers shall not be required in clothes closets, linen closets, and pantries that meet the following conditions:

1. The area of the space does not exceed 24 sq. ft.
2. The shortes dimension does not exceed 3 ft.
3. The walls and ceilings are surfaced with noncombustible or limited-combustible materials as defined in NFPA 220.
4. The closet does not contain any type of electrical items such as light fixtures, electrical outlets or low voltage equipment.

8.3.4. Sprinklers shall be installed in garages, carports and similar structures unless they meet the exception in sec. 903.2.2.1. Covered patios, decks, balconies or similar projections that extend 10 feet or more from the structure will require adequate fire sprinkler coverage.

8.3.10. Sprinklers shall be installed in saunas and wine rooms.

Revise 8.3.4 to read as follows:

8.3.4. Sprinklers may be omitted from carports and open attached porches. However, attached garages shall be protected with intermediate temperature rated sprinklers.

Sprinkler heads in garages shall be protected against mechanical damage by approved guards, unless recessed heads are provided. Garage doors may be disregarded in the layout of the fire sprinkler system.

Revise 8.3.5.1.1 to read as follows:

8.5.1.1. Where the fuel-fired equipment is above all of the occupied areas of the dwelling unit, at least one quick-response intermediate temperature sprinkler shall be installed above the equipment.

Add a new 10.2.4.1 to read as follows:

10.2.4.1 3-Head Calculation. When design conditions exceed the allowances of sec. 10.2, a 3-head calculation may be required by the FAHJ.

Add a new 10.2.5 to read as follows:

10.2.5 Pressure Cushion. The system shall be designed 10% below available water source pressure during peak usage.

Revise 11.2.1.1 to read as follows:

11.2.1.1 Hydrostatic Tests. Where a fire department connection is not provided, the system shall be hydrostatically tested at 200 psi.

Add a new 12.3.3 to read as follows:

12.3.3 Systems out of service. When sprinkler systems are shut-off or otherwise inoperative for periods greater than 48 hours for repair of service, the FAHJ must be notified immediately.

SEC. 96.1.APP.B103.3. AREAS WITHOUT WATER SUPPLY SYSTEMS.

Appendix B, section B103.3 of the California Fire Code is revised to read:

B103.3 Areas without water supply systems. For information regarding water supplies for fire-fighting purposes in rural areas and suburban areas in which adequate and reliable water supplies do not exist, the fire code official is authorized to utilize NFPA 1142 or the standard published by the Insurance Services Office document entitled "Guide for Determination of Required Fire Flow."

SEC. 96.1.APP.H100 REPORTING FORMS

Appendix H, sec. H100 is added to the California Fire Code to read:

SECTION H100
REPORTING FORMS

H100.1 Reporting forms. Hazardous Materials reporting forms currently adopted by San Diego County Department of Environmental Health Hazardous Materials Management Unit which cover the same areas as forms contained in this Appendix are adopted by reference and take precedence over this Appendix.

SEC. 96.1.007 EFFECTIVE DATE

This ordinance shall take effect and be in force thirty days after the date of its passage and before the expiration of fifteen days after its passage, a summary hereof shall be published once with the names of the members of this Board voting for and against it in the San Diego Commerce, a newspaper of general circulation published in the County of San Diego.

APPROVED AS TO FORM AND LEGALITY
COUNTY COUNSEL
BY
William A. Johnson, Jr.
Senior Deputy County Counsel

INDEX BY CODE SECTION
CONSOLIDATED FIRE CODE

County Section	District Section	Subject	Difference
96.1.001	Section 1	Adoption of the Calif. Fire Code	Same
96.1.004		Responsibility for Enforcement	JD
96.1.005	Section 3	Geographic Limits	JD
96.1.101.5	101.5	Validity	Same
96.1.102.13	102.13	Conflicting Ordinances Repealed	Same
96.1.104.1	104.1	General Authority and Responsibilities	Same
96.1.104.8	104.8	Modifications	Same
96.1.104.12	104.12	Cost Recovery	Same
96.1.105.3.9	105.3.9	Expense Recovery	Same
96.1.105.6.5.1	105.6.5.1	Christmas Tree Lots--Permit Required	Same
96.1.105.6.19.1	105.6.19.1	Greenwaste Operations--Permit Required	Same
96.1.105.8	105.8	New Materials, Processes or Occupancies	Same
96.1.108	108	Appeals	Same
96.1.109.4	109.4	Violations	D11
96.1.202	202	Definitions	JD
96.1.304.1.4	304.1.4	Outdoor Carnivals and Fairs	Same
96.1.305.5	305.5	Rockets, Model Aircraft and Similar Devices	Same
96.1.307.5	307.5	Attendance of Open Burning and Rec. Fires	Same
96.1.319	319	Mid-rise Buildings	Same
96.1.320	320	Storage of Firewood	Same
96.1.501.3.1	501.3.1	Fire Apparatus Access Modifications	Same
96.1.503.1	503.1	Fire Apparatus Access Road--General	Same
96.1.503.1.1	503.1.1	Apparatus Access to Buildings and Facilities	Same
96.1.503.1.2	503.1.2	Additional Access	Same
96.1.503.1.3	503.1.3	Dead-end Roads	Same
96.1.503.1.4	503.1.4	Apparatus Access to High-piled Storage	Same
96.1.503.2.1	503.2.1	Dimensions	D9
96.1.503.2.2	503.2.2	Authority to Increase Minimum Dimensions	Same
96.1.503.2.3	503.2.3	Surface--Paving	D12
96.1.503.2.4	503.2.4	Roadway Radius	Same
96.1.503.2.5	503.2.5	Dead Ends	Same
96.1.503.2.6	503.2.6	Bridges and Elevated Surfaces	Same
96.1.503.2.7	503.2.7	Grade	Same
96.1.503.2.8	503.2.8	Roadway Turnouts	Same
96.1.503.3	503.3	Marking	Same
96.1.503.3.1	503.3.1	Fire Lane Designation	Same
96.1.503.4	503.4	Obstruction of Fire Apparatus Access Roads	Same
96.1.503.4.1	503.4.1	Traffic Calming Devices	Same
96.1.503.5	503.5	Gates or Barricades	Same
96.1.503.6	503.6	Security Gates	Same
96.1.505.1	505.1	Address Numbers	D1
96.1.505.2	505.2	Street or Road Signs	Same
96.1.505.3	505.3	Easement Address Signs	Same

Key: **D** means different than the County Fire Code and the following number is the number of fire districts affected.
JD means administrative provisions where the text may vary between several fire districts but there is no difference in policy or application of the fire code.
Same means that the amendment is the same in every one of the (16) jurisdictions.

INDEX BY CODE SECTION
CONSOLIDATED FIRE CODE

County Section	District Section	Subject	Difference
96.1.505.4	505.4	Directory Map	Same
96.1.505.5	505.5	Response Map Updates	Same
96.1.506.1.3	506.1.3	Emergency Key Access	Same
96.1.507.2	507.2	Type of Water Supply	Same
96.1.507.2.1	507.2.1	Private Fire Service Mains	Same
96.1.507.2.2	507.2.2	Water Tanks	Same
96.1.507.3	507.3	Fire Flow	Same
96.1.507.5.1	507.5.1	Water Supplies--Required Installations	Same
96.1.507.5.1.1	507.5.1.1	Fire Hydrant Locations	D9
96.1.507.5.1.1.3	507.5.1.1.3	Fire Hydrant Construction & Configuration	D1
96.1.507.5.1.2	507.5.1.2	Waterline Extensions	Same
96.1.507.5.1.3	507.5.1.3	Hydrant for Standpipe Systems	Same
96.1.507.5.7	507.5.7	Fire Hydrant and Fire Valve Location	Same
96.1.507.5.7.1	507.5.7.1	Signing of Water Sources	Same
96.1.603.6.6	603.6.6	Spark Arresters	Same
96.1.603.8.1	603.8.1	Residential Incinerators	Same
96.1.605.11.3.3.3	605.11.3.3.3	Smoke Ventilation	Same
96.1.605.11.4	605.11.4	Ground-Mounted Photovoltaic Arrays	Same
96.1.901.4.7	901.4.7	Fire Department Connections	Same
96.1.901.8.2	901.8.2	Fire Hydrants & Fire Appliances--Deactivation	Same
96.1.903.2	903.2	Automatic Sprinkler Systems--Where required	D4
96.1.903.4	903.4	Sprinkler System Monitoring & Alarms	Same
96.1.2808	2808	Greenwaste Operations	Same
96.1.3206.2	3206.2	High-Piled Storage Fire Protection	Same
96.1.3318.1	3318.1	Fuel Modification Zone During Construction	Same
96.1.4902	4902	Wildland-Urban Interface--Definitions	Same
96.1.4903	4903	Fire Protection Plan	Same
96.1.4905	4905	Wildfire Protection Building Construction	Same
96.1.4907	4907	Defensible Space	D10
96.1.5601.2	5601.2	Explosives & Fireworks	D7
96.1.5608.1	5608.1	Fireworks Display	Same
96.1.5705.2.4	5705.2.4	Transferring Flammable Liquids	Same
96.1.5706.2.5.2.1	5706.2.5.2.1	Tanks for Gravity Discharge	Same
96.1.5706.2.8.2	5706.2.8.2	Tank Vehicle Substitute	Same
96.1.6107.5	6107.5	LPG Tanks Secured	Same
96.1.8001	8001	Referenced Standard NFPA 13D	D1
96.1.APP.B103.3	APP.B103.3	Areas Without Water Supply Systems	Same
96.1.APP.H100.1	APP.H100.1	Hazardous Materials Forms	Same

Key: **D** means different than the County Fire Code and the following number is the number of fire districts affected.
JD means administrative provisions where the text may vary between several fire districts but there is no difference in policy or application of the fire code.
Same means that the amendment is the same in every one of the (16) jurisdictions.

INDEX BY SUBJECT
CONSOLIDATED FIRE CODE

Subject	County Section	District Section	Difference
Additional Access	96.1.503.1.2	503.1.2	Same
Address Numbers	96.1.505.1	505.1	D1
Adoption of the Calif. Fire Code	96.1.001	Section 1	Same
Apparatus Access to Buildings and Facilities	96.1.503.1.1	503.1.1	Same
Apparatus Access to High-piled Storage	96.1.503.1.4	503.1.4	Same
Appeals	96.1.108	108	Same
Areas Without Water Supply Systems	96.1.APP.B103.3	APP.B103.3	Same
Attendance of Open Burning and Rec. Fires	96.1.307.5	307.5	Same
Authority to Increase Minimum Dimensions	96.1.503.2.2	503.2.2	Same
Automatic Sprinkler Systems--Where required	96.1.903.2	903.2	D4
Bridges and Elevated Surfaces	96.1.503.2.6	503.2.6	Same
Christmas Tree Lots--Permit Required	96.1.105.6.5.1	105.6.5.1	Same
Conflicting Ordinances Repealed	96.1.102.13	102.13	Same
Cost Recovery	96.1.104.12	104.12	Same
Dead-end Roads	96.1.503.1.3	503.1.3	Same
Dead Ends—Turnarounds Required	96.1.503.2.5	503.2.5	Same
Defensible Space	96.1.4907	4907	D10
Definitions	96.1.202	202	JD
Dimensions	96.1.503.2.1	503.2.1	D9
Directory Map	96.1.505.4	505.4	Same
Easement Address Signs	96.1.505.3	505.3	Same
Emergency Key Access	96.1.506.1.3	506.1.3	Same
Expense Recovery	96.1.105.3.9	105.3.9	Same
Explosives & Fireworks	96.1.5601.2	5601.2	Same
Fire Apparatus Access Modifications	96.1.501.3.1	501.3.1	Same
Fire Apparatus Access Road--General	96.1.503.1	503.1	Same
Fire Department Connections	96.1.901.4.7	901.4.7	Same
Fire Flow	96.1.507.3	507.3	Same
Fire Hydrant and Fire Valve Location	96.1.507.5.7	507.5.7	Same
Fire Hydrant Construction & Configuration	96.1.507.5.1.1.3	507.5.1.1.3	D1
Fire Hydrant Locations	96.1.507.5.1.1	507.5.1.1	D10
Fire Hydrants & Fire Appliances--Deactivation	96.1.901.8.2	901.8.2	Same
Fire Lane Designation	96.1.503.3.1	503.3.1	Same
Fire Protection Plan	96.1.4903	4903	Same
Fireworks Display	96.1.5608.1	5608.1	Same
Fuel Modification Zone During Construction	96.1.3318.1	3318.1	Same
Gates or Barricades	96.1.503.5	503.5	Same
General Authority and Responsibilities	96.1.104.1	104.1	Same
Geographic Limits	96.1.005	Section 3	JD
Grade	96.1.503.2.7	503.2.7	Same
Greenwaste Operations	96.1.2808	2808	Same
Greenwaste Operations--Permit Required	96.1.105.6.19.1	105.6.19.1	Same

Key: **D** means different than the County Fire Code and the following number is the number of fire districts affected.
JD means administrative provisions where the text may vary between several fire districts but there is no difference in policy or application of the fire code.
Same means that the amendment is the same in every one of the (16) jurisdictions.

INDEX BY SUBJECT
CONSOLIDATED FIRE CODE

Subject	County Section	District Section	Difference
Ground-Mounted Photovoltaic Arrays	96.1.605.11.4	605.11.4	Same
Hazardous Materials Forms	96.1.APP.H100.1	APP.H100.1	Same
High-Piled Storage Fire Protection	96.1.3206.2	3206.2	Same
Hydrant for Standpipe Systems	96.1.507.5.1.3	507.5.1.3	Same
LPG Tanks Secured	96.1.6107.5	6107.5	Same
Marking	96.1.503.3	503.3	Same
Mid-rise Buildings	96.1.319	319	Same
Modifications	96.1.104.8	104.8	Same
New Materials, Processes or Occupancies	96.1.105.8	105.8	Same
Obstruction of Fire Apparatus Access Roads	96.1.503.4	503.4	Same
Outdoor Carnivals and Fairs	96.1.304.1.4	304.1.4	Same
Private Fire Service Mains	96.1.507.2.1	507.2.1	Same
Referenced Standard NFPA 13D	96.1.8001	8001	J1
Residential Incinerators	96.1.603.8.1	603.8.1	Same
Response Map Updates	96.1.505.5	505.5	Same
Responsibility for Enforcement	96.1.004		JD
Roadway Radius	96.1.503.2.4	503.2.4	Same
Roadway Turnouts	96.1.503.2.8	503.2.8	Same
Rockets, Model Aircraft and Similar Devices	96.1.305.5	305.5	Same
Security Gates	96.1.503.6	503.6	Same
Signing of Water Sources	96.1.507.5.7.1	507.5.7.1	Sames
Smoke Ventilation	96.1.605.11.3.3.3	605.11.3.3.3	Same
Spark Arresters	96.1.603.6.6	603.6.6	Same
Sprinkler System Monitoring & Alarms	96.1.903.4	903.4	Same
Storage of Firewood	96.1.320	320	Same
Street or Road Signs	96.1.505.2	505.2	Same
Surface--Paving	96.1.503.2.3	503.2.3	D12
Tanks for Gravity Discharge	96.1.5706.2.5.2.1	5706.2.5.2.1	Same
Tank Vehicle Substitute	96.1.5706.2.8.2	5706.2.8.2	Same
Traffic Calming Devices	96.1.503.4.1	503.4.1	Same
Transferring Flammable Liquids	96.1.5705.2.4	5705.2.4	Same
Type of Water Supply	96.1.507.2	507.2	Same
Validity	96.1.101.5	101.5	Same
Violations	96.1.109.4	109.4	D11
Water Supplies--Required Installations	96.1.507.5.1	507.5.1	Same
Water Tanks	96.1.507.2.2	507.2.2	Same
Waterline Extensions	96.1.507.5.1.2	507.5.1.2	Same
Wildfire Protection Building Construction	96.1.4905	4905	Same
Wildland-Urban Interface--Definitions	96.1.4902	4902	Same

Key: **D** means different than the County Fire Code and the following number is the number of fire districts affected.
JD means administrative provisions where the text may vary between several fire districts but there is no difference in policy or application of the fire code.
Same means that the amendment is the same in every one of the (16) jurisdictions.

SAN DIEGO COUNTY FIRE AUTHORITY

5510 OVERLAND AVE., SUITE 250, SAN DIEGO, CA 92123 • (858) 974-5999

Emergency Vehicle Turnaround

Hammerhead Turnaround

Residential fire access road/driveway serving no more than two dwellings

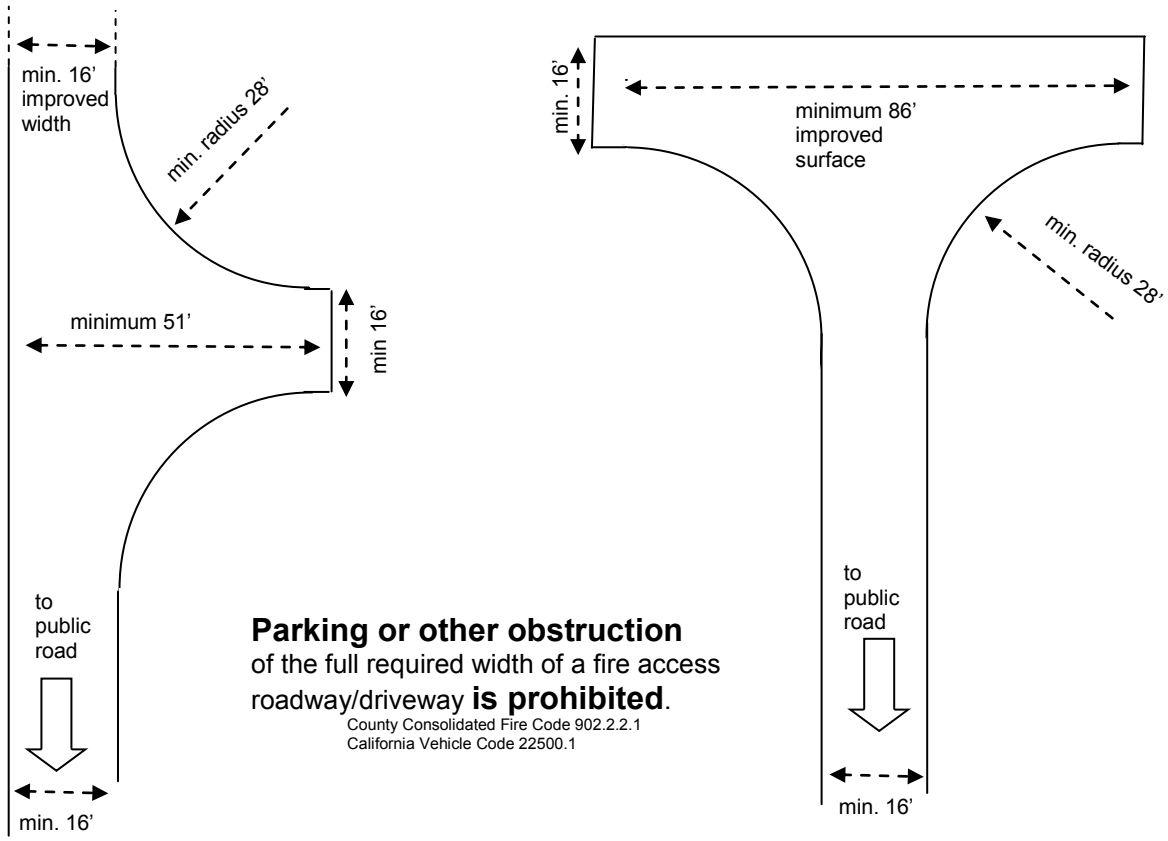

Parking or other obstruction of the full required width of a fire access roadway/driveway **is prohibited**.

County Consolidated Fire Code 902.2.2.1
California Vehicle Code 22500.1

Cul-de-sac Turnaround

Residential fire access road serving three or more dwellings

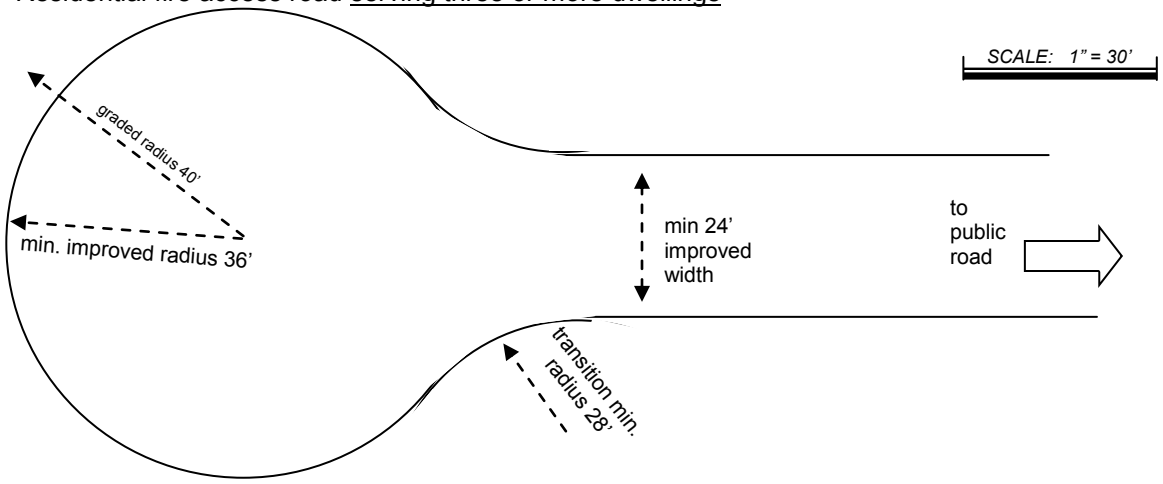

SAN DIEGO COUNTY FIRE AUTHORITY

5510 OVERLAND AVE., SUITE 250, SAN DIEGO, CA 92123 • (858) 974-5999

Emergency Vehicle Turnaround

Code Excerpts:

SECTION 503
FIRE APPARATUS ACCESS ROADS

Sec. 503.1 General. Fire apparatus access roads, including private residential driveways, shall be required for every building hereafter constructed when any portion of an exterior wall of the first story is located more than 150 feet from the closest point of fire department vehicle access.
Fire apparatus access roads, except private residential driveways, shall be provided and maintained for purposes of rapid and reliable fire apparatus access and for unobstructed traffic circulation for evacuation or relocation of civilians during a wildfire or other emergency.
Fire apparatus access roads shall be provided and maintained in compliance with this section and the most recent edition and any amendments thereto, of public and private road standards as adopted by the County of San Diego (San Diego County Standards for Private Roads and Public Roads, San Diego County Department of Public Works). The fire code official may modify the requirements of this section if the modification provides equivalent access.

Sec. 503.2.1 Dimensions. The dimensions of fire apparatus access roads shall be in accordance with the following:
(a) Fire apparatus access roads shall have an unobstructed improved width of not less than 24 feet, except for single-family residential driveways serving no more than two single-family dwellings, which shall have a minimum of 16 feet of unobstructed improved width. Any of the following, which have separated lanes of one-way traffic: gated entrances with card readers, guard stations or center medians, are allowed, provided that each lane is not less than 14 feet wide.
(b) Fire apparatus access roads that are public or private roads which are provided or improved as a result of a Tentative Map, Tentative Parcel Map or a Major/Minor Use Permit shall have the dimensions as set forth by the County of San Diego Standards for Public and Private Roads.
(c) All fire apparatus access roads shall have an unobstructed vertical clearance of not less than 13 feet 6 inches.
(d) Vertical clearances or road widths shall be increased when the fire code official determines that vertical clearances or road widths are not adequate to provide fire apparatus access.
(e) Vertical clearances or road width may be reduced when the fire code official determines the reduction does not impair access by fire apparatus. In cases where the vertical clearance has been reduced, approved signs shall be installed and maintained indicating the amount of vertical clearance.

Sec. 503.2.3 Surface. Fire apparatus access roads shall be designed and maintained to support the imposed loads of fire apparatus (not less than 75,000 lbs. unless authorized by the FAHJ) and shall be provided with an approved surface so as to provide all-weather driving capabilities. The paving and sub-base shall be installed to the standards specified in the County of San Diego Parking Design Manual.

Sec. 503.2.4 Roadway radius. The horizontal inside radius of a fire apparatus access road shall comply with the County public and private road standards approved by the Board of Supervisors. The horizontal inside radius for a private residential driveway shall be a minimum of 28 feet, as measured on the inside edge of the improvement width or as approved by the fire code official. The length of vertical curves of fire apparatus access roads shall be less than 100 feet, or as approved by the fire code official.

Sec. 503.2.5 Dead ends. All dead-end fire access roads in excess of 150 feet in length shall be provided with approved provisions for turning around emergency apparatus. A cul-de-sac shall be provided in residential areas where the access roadway serves more than 2 structures. The minimum unobstructed radius width for a cul-de-sac in a residential area shall be 36 feet paved, 40 feet graded, or as approved by the fire code official. The fire code official shall establish a policy identifying acceptable turnarounds for various project types.

Sec. 503.2.8 Roadway Turnouts. When required by the fire code official, turnouts shall be a minimum of 12 feet wide and 30 feet long with a minimum 25 foot taper on each end.

SAN DIEGO COUNTY
DEPARTMENT OF PUBLIC WORKS

DESIGN STANDARDS

Published by the Department of Public Works
CIP Project Development Section

October 2012

SAN DIEGO COUNTY
DEPARTMENT OF PUBLIC WORKS

INDEX OF DESIGN STANDARDS

NUMBER	TITLE
DS-01	TYPICAL ROADWAY SECTIONS
DS-02	HILLSIDE RESIDENTIAL STREET ALTERNATIVE NO. 1
DS-03	HILLSIDE RESIDENTIAL STREET ALTERNATIVE NO. 2
DS-04	HILLSIDE RESIDENTIAL STREET ALTERNATIVE NO. 3
DS-05	TEMPORARY TURNAROUND AT DEAD END STREET
DS-06	TURNAROUND DETAIL AND CALCULATIONS
DS-07	ASPHALT CONCRETE DRIVEWAY
DS-08	LOT GRADING
DS-09	FENCING CUT BANKS AND WALLS
DS-10	GRADING OF SLOPES
DS-11	REQUIRED SETBACKS
DS-12	CONSTRUCTION PLAN LINES, HATCH PATTERNS & SYMBOLS
DS-13A	STREET NAME SIGN FOR UNSIGNALIZED INTERSECTIONS
DS-13B	STREET NAME SIGN NOTES FOR UNSIGNALIZED INTERSECTIONS
DS-13C	STREET NAME SIGN DETAILS FOR UNSIGNALIZED INTERSECTIONS
DS-13D	STREET NAME SIGN FOR SIGNALIZED INTERSECTIONS
DS-13E	STREET NAME SIGN NOTES FOR SIGNALIZED INTERSECTIONS
DS-13F	SIGN MOUNTING DETAIL FOR SIGNALIZED INTERSECTIONS
DS-13G	ABBREVIATIONS FOR STREET NAME SIGNS
DS-14	DIP SECTION (PRIVATE ROAD)
DS-15	STREET KNUCKLE
DS-16	CLEAR SPACE EASEMENT MARKERS
DS-17	GATED DRIVEWAY ENTRANCE TYPE I
DS-18	GATED DRIVEWAY ENTRANCE TYPE II
DS-19	GATED DRIVEWAY ENTRANCE, TYPE III
DS-20A	CLEAR SPACE EASEMENT TYPE A
DS-20B	CLEAR SPACE EASEMENT TYPE B
DS-20C	LIMITED USE AREA -TYPE A
DS-20D	LIMITED USE AREA- TYPE B
DS-21A	CURB RAMP - TYPES A (NEW CONSTRUCTION)
DS-21B	CURB RAMP - TYPES B (NEW CONSTRUCTION)
DS-21C	CURB RAMP –TYPE C (EXISTING SIDEWALK)
DS-21D	CURB RAMP – TYPE D (ALLEY STREETS & DRIVEWAYS)
DS-21E	GENERAL NOTES FOR CURB RAMPS
DS-21F	CURB RAMP DETAILS
DS-22	TRENCH RESURFACING TYPE R
DS-23A	CABLE RAILING FOR RETAINING WALL
DS-23B	CABLE RAILING DETAILS

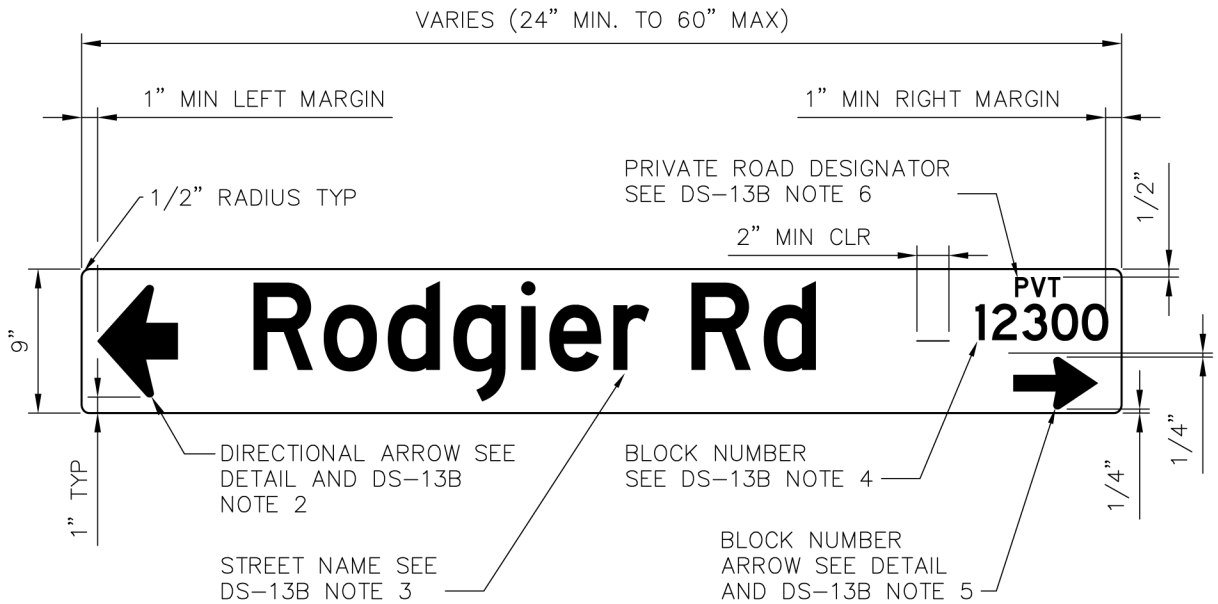

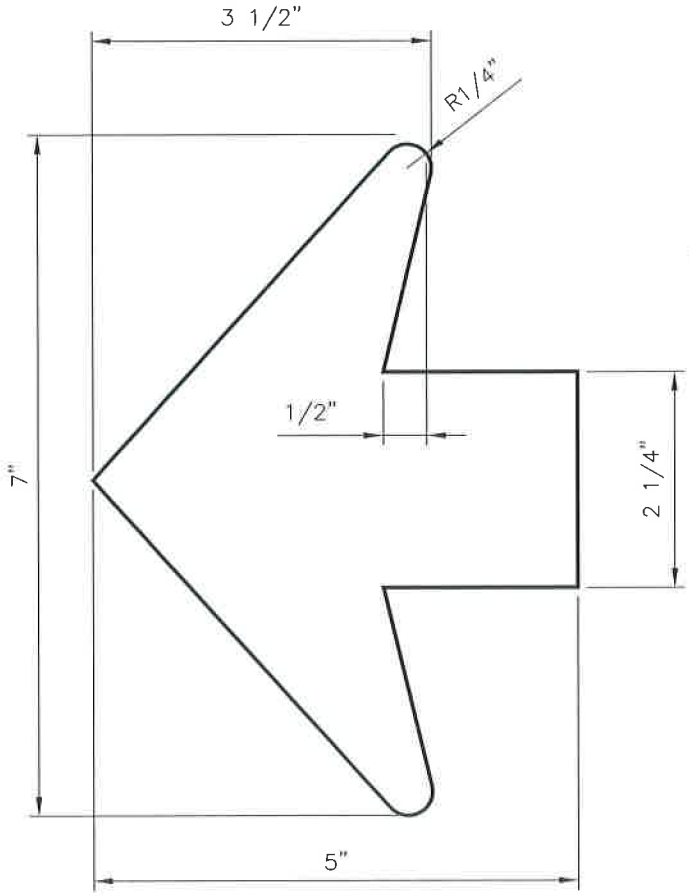

DIRECTIONAL ARROW DETAIL

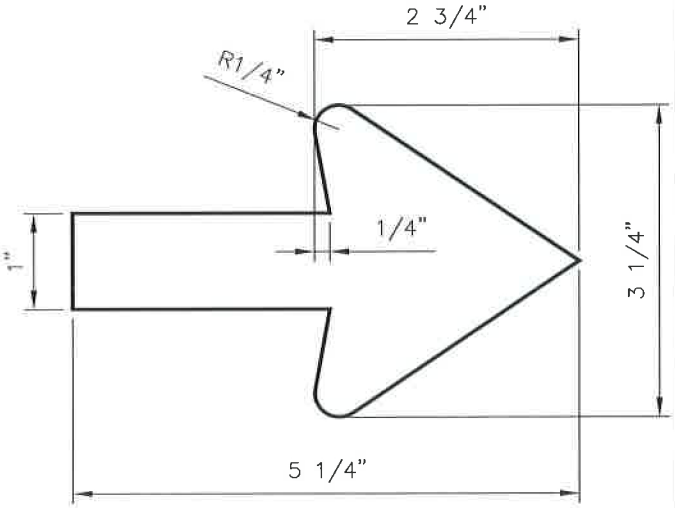

BLOCK NUMBER ARROW DETAIL

SEE NOTES ON DS-13B FOR ADDITIONAL SPECIFICATIONS AND REQUIREMENTS

DRAWN BY: GF	CHECKED BY: KVS	SAN DIEGO COUNTY DESIGN STANDARD	REVISIONS	APPROVED	DATE
RECOMMENDED BY: JEFF S. MOODY, P.E.			NEW	JSM	10/2012
APPROVED BY COUNTY ENGINEER DATE: 10/5/12 MOHAMAD FAKHRRIDDINE, P.E. R.C.E. NO. 44520, EXP 3/31/2014		STREET NAME SIGN FOR UNSIGNALIZED INTERSECTIONS	DRAWING NUMBER	DS-13A	

1. THE BLADES OF STREET NAME SIGNS AT UNSIGNALIZED INTERSECTIONS SHALL BE DOUBLE FACED WITH A GREEN BACKGROUND AND WHITE LEGEND. THE STREET NAME SIGN BLADE BLANK SHALL BE 0.125" THICK ALUMINUM ALLOY 6063–T6, 6061–T6, 5052–H38, OR APPROVED EQUAL. UNLESS OTHERWISE SPECIFIED, THE SMALLEST POSSIBLE BLANK WHICH MEETS THESE SPECIFICATIONS AND MAINTAINS AESTHETICS SHALL BE USED FOR EACH STREET NAME SIGN BLADE. BOTH FACES OF THE BLANK SHALL BE COMPLETELY COVERED WITH EITHER WHITE ASTM D4956 TYPE IX SIGN SHEETING (3M DIAMOND GRADE VIP WHITE 3990 OR APPROVED EQUAL) OR PROPOSED TYPE XI SIGN SHEETING (3M DIAMOND GRADE DG3 WHITE 4090 OR APPROVED EQUAL). THEN, 3M ELECTRONIC CUTTABLE TRANSPARENT FILM GREEN 1177 (OR APPROVED EQUAL) WITH THE DESIGNATED STREET NAME SIGN INFORMATION CUT OUT SHALL BE APPLIED TO BOTH SIGN FACES OF THE BLADE. THE YELLOW PRIVATE ROAD DESIGNATOR SHALL BE APPLIED PER NOTE 6. LASTLY, BOTH SIDES OF THE BLADE IS COVERED WITH PREMIUM CLEAR PROTECTIVE OVERLAY FILM (3M 1160 OR EQUIVALENT). ALL SIGN SHEETING AND FILMS USED ON EACH STREET NAME SIGN BLADE SHALL BE COMPATIBLE TO ENSURE MATERIAL WARRANTIES ARE EFFECTIVE.

2. THE DIRECTIONAL ARROW SHALL BE USED AT INTERSECTIONS THAT HAVE STREET NAME CHANGES. THE DIRECTIONAL ARROW INDICATES WHICH LEG OF THE INTERSECTION HAS THE RESPECTIVE STREET NAME. THE DIRECTIONAL ARROW IS DISPLAYED IN WHITE ON THE BLADE. THE COMPASS DIRECTION OF THE DIRECTIONAL ARROW FOR EACH STREET NAME SIGN BLADE SHALL BE SPECIFIED WHEN ORDERED.

3. THE STREET NAME IS DISPLAYED IN WHITE ON THE STREET NAME SIGN BLADE. ONLY THE OFFICIAL COUNTY RECORDED NAME AND SPELLING SHALL BE USED ON THE STREET NAME SIGN. ONLY COUNTY APPROVED ABBREVIATIONS PER DS–13G SHALL BE USED ON THE STREET NAME SIGN BLADES. THE STREET NAME SHALL BE CENTERED VERTICALLY ON EACH STREET NAME SIGN BLADE. THE STREET NAME LETTERING SHALL BE 6" UPPERCASE AND 4.5" LOWERCASE HIGHWAY GOTHIC FONT, WITH STYLE AND SPACING AS ESTABLISHED IN THE CALIFORNIA MANUAL ON UNIFORM TRAFFIC CONTROL DEVICES (CAMUTCD), CURRENT EDITION. STROKE WIDTH AND LETTER WIDTH USED FOR THE WHOLE STREET NAME MAY VARY FROM SERIES B TO SERIES E (REFER TO FHWA STANDARD SIGNS AND MARKINGS SIGN FONTS AT HTTP://MUTCD.FHWA.DOT.GOV/SHSE/ALPHABETS.PDF). THE MINIMUM GAP DISTANCE BETWEEN THE DIRECTIONAL ARROW AND THE STREET NAME SHALL EQUAL THE SPACING USED FOR THE BLANK SPACES IN THE STREET NAME.

4. THE BLOCK NUMBER IS DISPLAYED IN WHITE ON THE STREET NAME SIGN BLADE. THE BLOCK NUMBER LETTERING SHALL BE 3" HIGH HIGHWAY GOTHIC FONT WITH STYLE AND SPACING AS ESTABLISHED BY THE CAMUTCD, CURRENT EDITION. THE SERIES USED FOR THE WHOLE BLOCK NUMBER SHALL BE OF THE SAME SERIES THAT IS USED FOR THE STREET NAME.

5. THE BLOCK NUMBER ARROW IS DISPLAYED IN WHITE ON THE STREET NAME SIGN BLADE. THE BLOCK NUMBER ARROW SHALL BE CENTERED BELOW THE BLOCK NUMBER. THE COMPASS DIRECTION OF THE BLOCK NUMBER ARROW FOR EACH STREET NAME SIGN BLADE SHALL BE SPECIFIED WHEN ORDERED.

6. THE PRIVATE ROAD DESIGNATOR (PVT) IS ONLY USED ON STREET NAME BLADES FOR ROADS THAT ARE NOT MAINTAINED BY THE COUNTY OF SAN DIEGO (PRIVATE ROADS). THE PVT IS DISPLAYED IN YELLOW ON THE STREET NAME BLADE. THE PVT SHALL BE CENTERED ABOVE THE BLOCK NUMBER. THE PVT LETTERING SHALL BE 1 1/4" UPPERCASE HIGHWAY GOTHIC FONT SERIES E WITH STYLE AND SPACING AS ESTABLISHED BY THE CAMUTCD, CURRENT EDITION. THE PVT SHALL BE MADE OF ASTM D4956 TYPE I SHEETING (3M PRISMATIC ENGINEER GRADE YELLOW 3431 OR APPROVED EQUAL) AND PLACED ON THE STREET NAME SIGN BLADE PRIOR TO THE CLEAR PROTECTIVE OVERLAY SHEETING.

7. STREET NAME SIGNS SHALL BE MOUNTED ON POLES PER DS–13C. NO OTHER SIGNS SHALL BE MOUNTED ON STREET NAME SIGN POLES UNLESS TALLER POLES ARE SPECIFIED TO MEET CAMUTCD REQUIRED GROUND CLEARANCES FOR SIGNS.

DRAWN BY: GF	CHECKED BY: KVS	SAN DIEGO COUNTY DESIGN STANDARD	REVISIONS	APPROVED	DATE
RECOMMENDED BY: JEFF S. MOODY, P.E.			NEW	JSM	10/2012
APPROVED BY COUNTY ENGINEER DATE: 10/15/12 MOHAMAD FAKHRRIDDINE, P.E. R.C.E. NO. 44520, EXP 3/31/2014		STREET NAME SIGN NOTES FOR UNSIGNALIZED INTERSECTIONS			
			DRAWING NUMBER	DS-13B	

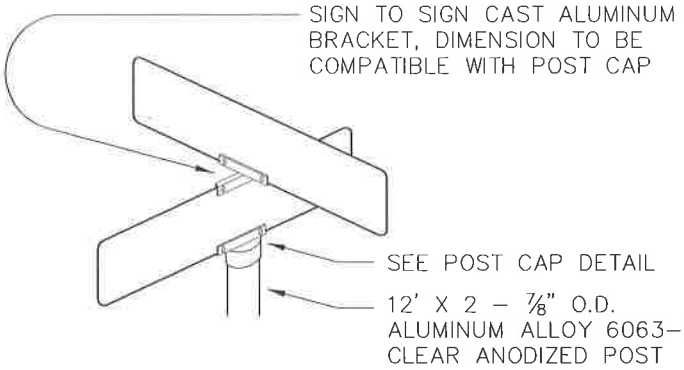

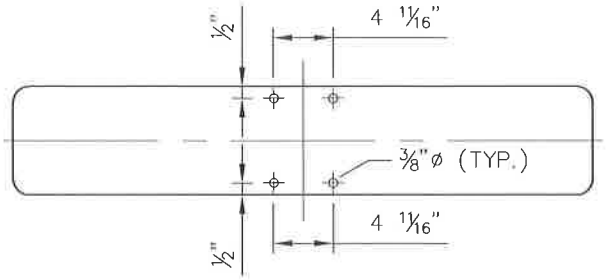

TYPICAL STREET NAME BLADE DETAIL

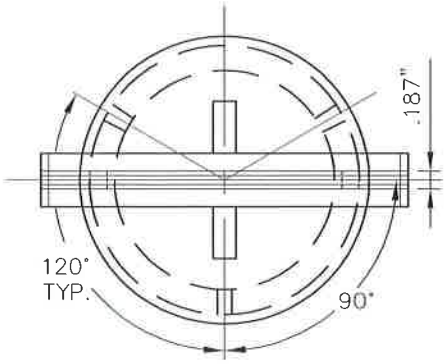

POST CAP DETAIL

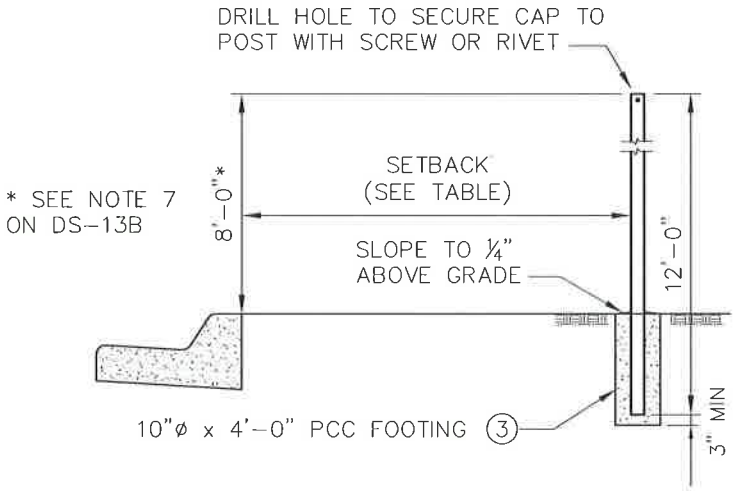

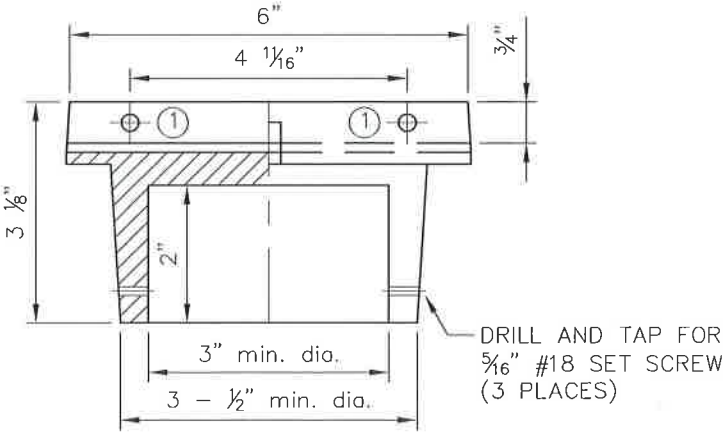

POST CAP HALF-SECTION DETAIL

CURB AND SIDEWALK	SIDEWALK WIDTH	MINIMUM SETBACK
CONTIGUOUS	6' OR LESS	SIDEWALK WIDTH
CONTIGUOUS	MORE THAN 6'	5'
NON CONTIGUOUS	----	5'

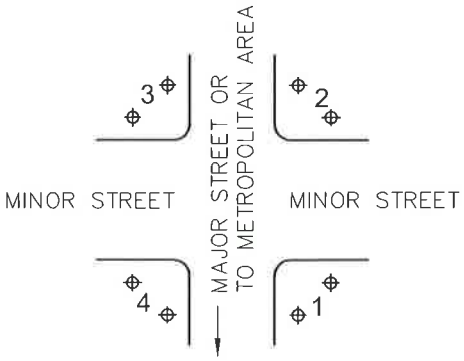

STREET NAME SIGN LOCATION

NUMBER INDICATES PRIORITY OF LOCATION SELECTION

NOTES:

1. DRILL 11/32"ø THROUGH HOLE NEAR SIDE FLANGE (TYP 2 LOCATIONS). DRILL AND TAP FOR 5/16"–#18 BOLTS IN LINE WITH 11/32"ø HOLES.
2. ALL ATTACHING SCREWS SHALL BE VANDAL PROOF TYPE AND GREASED BEFORE INSTALLATION.
3. CONCRETE SHALL BE EITHER GREENBOOK 520–C–2500 OR MINOR CONCRETE PER CALTRANS STANDARD SPECIFICATIONS AS SPECIFIED BY THE ENGINEER.

DRAWN BY: GF	CHECKED BY: KVS	SAN DIEGO COUNTY DESIGN STANDARD	REVISIONS	APPROVED	DATE
RECOMMENDED BY: JEFF S. MOODY, P.E.			REV	JSM	10/2012
APPROVED BY COUNTY ENGINEER DATE: 10/15/12 MOHAMAD FAKHRRIDDINE, P.E. R.C.E. NO. 44520, EXP 3/31/2014		STREET NAME SIGN DETAILS FOR UNSIGNALIZED INTERSECTIONS	DRAWING NUMBER		DS-13C

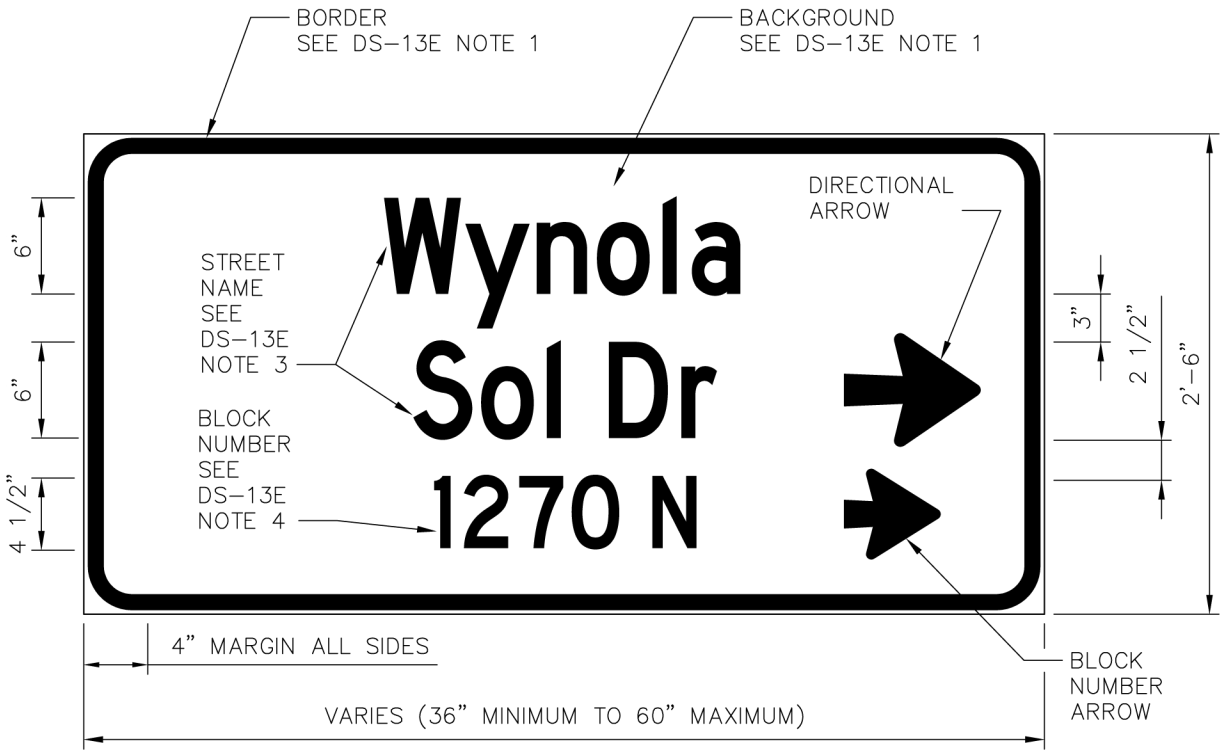

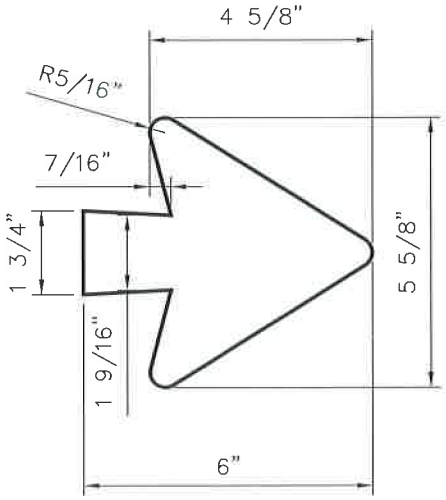

BLOCK NUMBER ARROW DETAIL

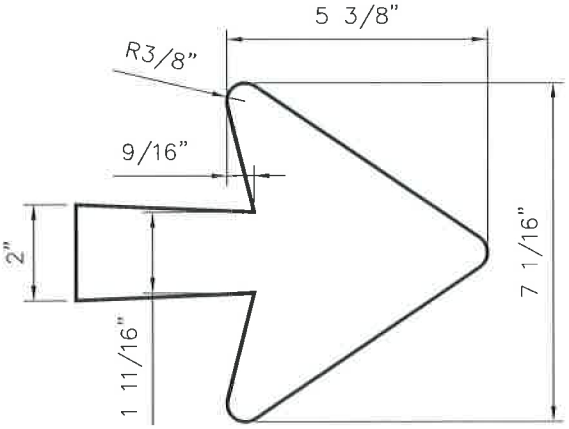

DIRECTIONAL ARROW DETAIL

SEE NOTES ON DS-13E FOR ADDITIONAL SPECIFICATIONS AND REQUIREMENTS

DRAWN BY: GF	CHECKED BY: KVS	SAN DIEGO COUNTY DESIGN STANDARD	REVISIONS	APPROVED	DATE
RECOMMENDED BY: JEFF S. MOODY, P.E.			NEW	JSM	10/2012
APPROVED BY COUNTY ENGINEER		STREET NAME SIGN FOR SIGNALIZED INTERSECTIONS			
DATE: 10/15/12			DRAWING NUMBER	DS-13D	

MOHAMAD FAKHRRIDDINE, P.E.
R.C.E. NO. 44520, EXP 3/31/2014

1. STREET NAME SIGNS AT SIGNALIZED INTERSECTIONS SHALL BE SINGLE FACED SIGNS WITH GREEN BACKGROUND, WHITE LEGEND, AND WHITE, 1" WIDE BORDER. THE STREET NAME SIGN BLANK SHALL BE 0.080" THICK ALUMINUM ALLOY 6063–T6, 6061–T6, 5052–H38, OR APPROVED EQUAL. UNLESS OTHERWISE SPECIFIED, THE SMALLEST POSSIBLE BLANK WHICH MEETS THESE SPECIFICATIONS AND MAINTAINS AESTHETICS SHALL BE USED FOR EACH STREET NAME SIGN. THE BLANK SHALL BE COMPLETELY COVERED WITH EITHER WHITE ASTM D4956 TYPE IX SIGN SHEETING (3M DIAMOND GRADE VIP WHITE 3990 OR APPROVED EQUAL) OR TYPE XI SIGN SHEETING (3M DIAMOND GRADE DG3 WHITE 4090 OR APPROVED EQUAL). THEN, A SINGLE SHEET OF 3M ELECTRONIC CUTTABLE TRANSPARENT FILM GREEN 1177 (OR APPROVED EQUAL) WITH THE DESIGNATED STREET NAME SIGN INFORMATION CUT OUT SHALL BE APPLIED TO THE SIGN FACE. THE 1" WIDE BORDER SHALL HAVE ROUNDED CORNERS (3" OUTSIDE RADIUS TYPICAL). LASTLY, THE SIGN FACE SHALL BE COVERED WITH PREMIUM CLEAR PROTECTIVE OVERLAY FILM (3M 1160 OR EQUIVALENT). ALL SHEETING AND FILMS USED ON EACH STREET NAME SIGN SHALL BE COMPATIBLE TO ENSURE MATERIAL WARRANTIES ARE EFFECTIVE.

2. THE DIRECTIONAL ARROW SHALL BE USED AT INTERSECTIONS THAT HAVE STREET NAME CHANGES, AND SHALL INDICATE WHICH LEG OF THE INTERSECTION HAS THE RESPECTIVE STREET NAME. THE DIRECTIONAL ARROW IS DISPLAYED IN WHITE ON THE BLADE. THE DIRECTIONAL ARROW IS CENTERED VERTICALLY WITH RESPECT TO THE ASSOCIATED LINE OF TEXT. THE COMPASS DIRECTION OF THE DIRECTIONAL ARROW FOR EACH STREET NAME SIGN BLADE SHALL BE SPECIFIED WHEN ORDERED.

3. THE STREET NAME IS DISPLAYED IN WHITE ON THE STREET NAME SIGN. ONLY THE OFFICIAL COUNTY RECORDED NAME AND SPELLING SHALL BE USED ON THE STREET NAME SIGN. ONLY COUNTY APPROVED ABBREVIATIONS PER DS–13G SHALL BE USED ON THE STREET NAME SIGNS. THE STREET NAME SIGN LETTERING SHALL BE 6" UPPERCASE AND 4.5" LOWERCASE HIGHWAY GOTHIC FONT, WITH STYLE AND SPACING AS ESTABLISHED IN THE CALIFORNIA MANUAL ON UNIFORM TRAFFIC DEVICES (CAMUTCD), CURRENT EDITION. STROKE WIDTH AND LETTER WIDTH USED FOR THE WHOLE STREET NAME MAY VARY FROM SERIES B TO SERIES E (REFER TO FHWA STANDARD SIGNS AND MARKINGS SIGN FONTS AT HTTP://MUTCD.FHWA.DOT.GOV/SHSE/ALPHABETS.PDF). THE MINIMUM GAP DISTANCE BETWEEN THE DIRECTIONAL ARROW AND THE STREET NAME SHALL EQUAL THE SPACING USED FOR THE BLANK SPACES IN THE STREET NAME. THE FIRST LINE OF TEXT ON THE SIGN SHALL ONLY CONTAIN THE NAME OF THE STREET. IF THE STREET NAME IS MADE OF PARTS, SOME OF THE PARTS OF THE NAME MAY BE PUT ON THE SECOND LINE OF TEXT TO MINIMIZE THE LENGTH OF THE SIGN. THE STREET NAME SUFFIX (St, Bl, Rd, Av, Dr, Ln, Wy) SHALL BE PLACED ON THE SECOND LINE OF TEXT. BOTH LINES OF TEXT ARE TO BE CENTERED HORIZONTALLY ON THE SIGN.

4. THE BLOCK NUMBER IS DISPLAYED IN WHITE ON THE STREET NAME SIGN. THE BLOCK NUMBER LETTERING SHALL BE 4.5" HIGH HIGHWAY GOTHIC FONT, WITH STYLE AND SPACING PER CAMUTCD, CURRENT EDITION. THE SERIES USED FOR THE WHOLE BLOCK NUMBER SHALL BE THE SAME SERIES THAT IS USED FOR THE STREET NAME. THE BLOCK NUMBER SHALL BE CENTERED HORIZONTALLY ON THE STREET NAME SIGN.

5. IF THE BLOCK NUMBER INCREASES TO THE LEFT OF THE SIGN, THEN USE A LEFT BLOCK NUMBER ARROW ON THE LEFT SIDE OF THE BLOCK NUMBER. BLOCK NUMBER AND THE BLOCK NUMBER ARROW SHALL BE SEPARATED BY 4". THE COMPASS DIRECTION OF THE BLOCK NUMBER ARROW FOR EACH STREET NAME SIGN SHALL BE SPECIFIED WHEN ORDERED.

6. SIGNS SHALL BE MOUNTED ON TRAFFIC SIGNAL POLES PER DS–13F.

DRAWN BY: GF	CHECKED BY: KVS	SAN DIEGO COUNTY DESIGN STANDARD	REVISIONS	APPROVED	DATE
RECOMMENDED BY: JEFF S. MOODY, P.E.			NEW	JSM	10/2012
APPROVED BY COUNTY ENGINEER DATE: 10/15/12 MOHAMAD FAKHRRIDDINE, P.E. R.C.E. NO. 44520, EXP 3/31/2014		STREET NAME SIGN NOTES FOR SIGNALIZED INTERSECTIONS			
			DRAWING NUMBER	DS-13E	

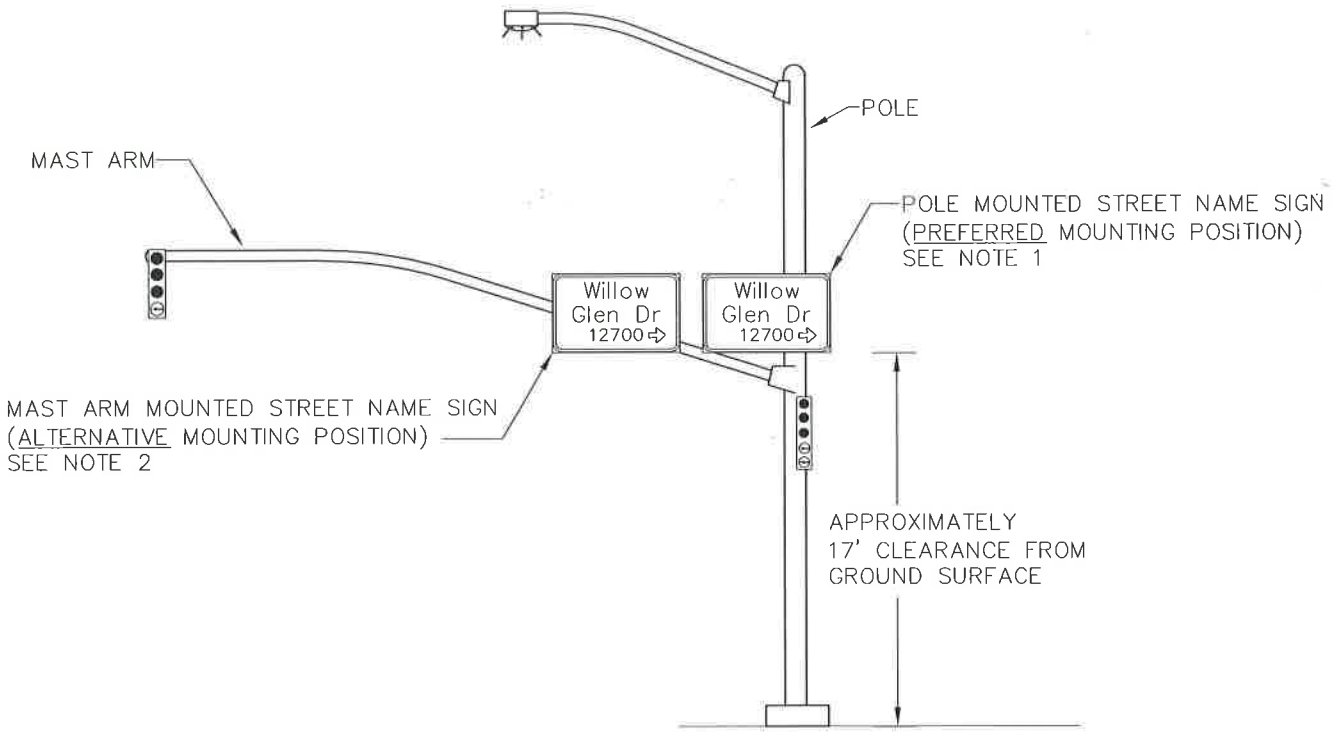

TYPICAL ELEVATION

NOTES:

1. THE NEW STREET NAME SIGN SHALL BE MOUNTED ON THE POLE APPROXIMATELY 17 FEET ABOVE THE GROUND SURFACE (ABOVE THE POLE MOUNTED SIGNAL HEAD AND IF POSSIBLE ABOVE THE MAST ARM). THE MOUNTING ASSEMBLY SHALL BE AN ASTRO SIGN-BRAC BAND MOUNT ASSEMBLY OR APPROVED EQUAL. ONE MOUNTING BRACKET ASSEMBLY SHALL BE USED PER 16 SQUARE FEET OF SIGN AREA. SIGNS SHALL BE MOUNTED WITH A 5-DEGREE TILT FROM VERTICAL TOWARD ONCOMING TRAFFIC FOR EASY READING. SIGNS SHALL BE MOUNTED SO THAT THE SIGN TEXT IS LEVEL. SITE PLANS SHALL SHOW THE APPROXIMATE ORIENTATIONS OF INDIVIDUAL SIGNS.

2. IF THE NEW STREET NAME SIGN CANNOT BE MOUNTED ON THE POLE AS DESCRIBED ABOVE, THE SIGN SHALL BE MOUNTED ON THE MAST ARM NEXT TO THE POLE. AN ASTRO SIGN-BRAC BAND MOUNT ASSEMBLY OR APPROVED EQUAL SHALL BE USED TO MOUNT THE NEW STREET NAME SIGN ONTO THE TRAFFIC SIGNAL MAST ARM. ONE MOUNTING BRACKET ASSEMBLY SHALL BE USED PER 16 SQUARE FEET OF SIGN AREA. SIGNS SHALL BE MOUNTED WITH A 5-DEGREE TILT FROM VERTICAL TOWARD ONCOMING TRAFFIC FOR EASY READING. SIGNS SHALL BE MOUNTED SO THAT THE SIGN TEXT IS LEVEL. SITE PLANS SHALL SHOW THE APPROXIMATE ORIENTATIONS OF INDIVIDUAL SIGNS.

DRAWN BY: GF	CHECKED BY: KVS	SAN DIEGO COUNTY DESIGN STANDARD	REVISIONS	APPROVED	DATE
RECOMMENDED BY: JEFF S. MOODY, P.E.			NEW	JSM	10/2012
APPROVED BY COUNTY ENGINEER DATE: 10/15/12 MOHAMAD FAKHRRIDDINE, P.E. R.C.E. NO. 44520, EXP 3/31/2014		SIGN MOUNTING DETAIL FOR SIGNALIZED INTERSECTIONS			
			DRAWING NUMBER	DS-13F	

NAME TO BE ABBREVIATED	ABBREVIATION	NAME TO ABBREVIATED	ABBREVIATION
Avenida	Avd	Place	Pl
Avenue	Av	Plaza	Plz
Boulevard	Bl	Rambla	Rmbla
Calle	Cl	Ranch	Rch
Callejon	Clj	Rancho	Rcho
Caminito	Cmto	Ridge	Rdg
Camino	Cam	River	Riv
Center	Ctr	Road	Rd
Circle	Cir	Saint – used at the beginning of a name	St
Corte	Cte		
Court	Ct	Santa	Snta
Creek	Ck	South	S
Drive	Dr	Spring	Spg
East	E	Springs	Spgs
Estate	Est	Station	Sta
Freeway	Fwy	Street – used at the end of a name	St
Gardens	Gdns		
Heights	Hts	Summit	Smt
Highlands	Hghlds	Terrace	Ter
Highway	Hwy	Trail	Tr
Lake	Lk	Truck Trail	TT
Lane	Ln	Valley	Vly
Loop	Lp	View	Vw
Meadow	Mdw	Village	Vlg
Mount	Mt	Vista	Vis
Mountain	Mtn	Way	Wy
North	N	West	W
Park	Pk		
Parkway	Pkwy		
Paseo	Pas		

DRAWN BY: GF CHECKED BY: KVS

RECOMMENDED BY: JEFF S. MOODY, P.E.

APPROVED BY COUNTY ENGINEER

DATE: 10/15/12

MOHAMAD FAKHRIDDINE, P.E.
R.C.E. NO. 44520, EXP 3/31/2014

SAN DIEGO COUNTY DESIGN STANDARD

ABBREVIATIONS FOR STREET NAME SIGNS

REVISIONS	APPROVED	DATE
NEW	JSM	10/2012

DRAWING NUMBER DS-13G