BOARD OF FORESTRY AND FIRE PROTECTION
P.O. Box 944246
SACRAMENTO, CA 94244-2460
Website: www.bof.fire.ca.gov
(916) 653-8007

To: Resource Protection Committee

From: Edith Hannigan, Analyst

Date: September 15, 2015

Re: San Bernardino County 4290 Certification Request

On August 5, 2015, San Bernardino County Fire District submitted their Ordinance No. FPD 14-03 for certification by the Board of Forestry and Fire Protection in lieu of PRC 4290/14 CCR § 1270. Staff conducted a review of the submitted ordinances, standards, and other county codes with Mike Horton, County Fire Marshal, and has provided a comparison matrix indicating where each state regulation is addressed in the county codes/standards.

There are several codes, ordinances, and standards used by San Bernardino to address fire safe development throughout the county. In the comparison matrix, there is reference to:

- San Bernardino County Fire Protection District Fire Code: attached to this memo
- San Bernardino County Development Code: available online http://www.sbcounty.gov/uploads/lus/developmentcode/DCWebsite.pdf
- San Bernardino Fire Prevention Standards A-2, A-3, Fire Safety Standard W-1, W-2: attached
- San Bernardino County Code Section 23.0801Compliance with Roof Covering Requirement Provisions of the County Development Code and California Building Code: attached
- San Bernardino County Code Sections 23.0301, 23.0304, 23.0307, and 23.0308 Relating to Abatement of Fire Hazards and Hazardous Trees and Fire Access Road Obstructions: attached
- California Fire Code: http://www.ecodes.biz/ecodes_support/Free_Resources/2013California/13Fire/13Fire_main.html
    - Of particular note, Chapter 1: http://www.ecodes.biz/ecodes_support/free_resources/2013California/13Fire/PDFs/Chapter%201%20-%20Scope%20and%20Administration.pdf
    - And Chapter 5: http://www.ecodes.biz/ecodes_support/free_resources/2013California/13Fire/PDFs/Chapter%205%20-%20Fire%20Service%20Features.pdf
- National Fire Protection Association (NFPA) 1142: http://www.nfpa.org/codes-and-standards/document-information-pages?mode=code&code=1142 (must create an account to view code)
- NFPA 24: http://www.nfpa.org/codes-and-standards/document-information-pages?mode=code&code=24 (must create an account to view code)
- San Bernardino County Standard Plans
    - Standard 303: http://www.sbcounty.gov/dpw/land/Standards/Document303.pdf
    - Standard 303a: http://www.sbcounty.gov/dpw/land/Standards/Document303A.pdf
    - Standard 303b: http://www.sbcounty.gov/dpw/land/Standards/Document303B.pdf
    - Standard 303c: http://www.sbcounty.gov/dpw/land/Standards/Document303C.pdf

A copy of the 2016 SRA Fire Safe Regulations is attached for your reference as well.

For ease of reference, relevant section and page numbers of each code are included in the comparison matrix where possible. Further information may be forthcoming as staff continues conversations with San Bernardino County Fire and CAL FIRE code specialists.

California Board of Forestry and Fire Protection
SRA Fire Safe Regulations
Certification Matrix

Without an accompanying letter from the Board of Forestry and Fire Protection, completion of this matrix does not indicate Board certification approval or denial of submitted local ordinances under 14 CCR § 1270.03. This matrix does not reflect the full text of the regulations and should be used as a guide only.

Internal Use Only			
Jurisdiction	Date Received	Board Meeting Date	Board Action
San Bernardino	August 10, 2015	September 30, 2015	

CCR Title 14 SRA Fire Safe Regulations	Local Ordinance	Meets or Exceeds
Sec. 1270 Title *Statement of the title of regulation*	San Bernardino County Fire Protection District Fire Code (SBSCFPDFC) Section 1(f), page 8	
Sec. 1270.01 Purpose *Statement of the purpose of regulation*	SBCFPDFC Section 1(a-f), pages 1 through 8	
Sec. 1270.02 Scope *Statement of the scope of regulation*	SBCFPDFC Section 1(f), page 8	
Sec. 1270.03 Local Ordinances *Board may certify local ordinances*	N/A	
Sec. 1270.04 Provisions for Application of These Regulations *How these regulations will be applied*	San Bernardino Development Code Chapter 81.01, page 1-3	
Sec. 1270.05 Inspection Authority *Establishing responsibility for enforcement*	SBCFPDFC Section 10(a), page 40	
Sec. 1270.06 Inspections *Authorization to conduct inspections*	SBCFPDFC Section 10(a), page 40	
Sec. 1270.07 Exceptions to Standards *Exceptions will be made on a case-by-case basis where the exception provides for same practical effect. Exceptions granted shall be forwarded to the CAL FIRE Unit Headquarters.*	California Fire Code (CFC) 104.9 – Chapter 1, page 14	
Sec. 1270.08 Requests for Exceptions *Requests shall be made in writing, stating the section(s), material facts, the exception proposed, and a map.*	CFC 104.9, 104.9.1 – Chapter 1, pages 14 and 15 Not as detailed requirements as §1270.08 but process is outlined in other departmental documents	
Sec. 1270.09 Appeals *Applicants may appeal exception denials. The inspection authority shall be consulted. If an appeal is granted, findings must be made and forwarded to CAL FIRE Unit HQ.*	SBCFPDFC Section 49, page 88	
Sec. 1271.00 Definitions *Definitions*	Most terminology in §1271.00 is missing. When viewed in the totality of the code, it might be fine, but further review will determine any omissions that should be added in.	
Sec. 1271.05 Distance Measurements *Distance measurements are along the ground.*		

CCR Title 14 SRA Fire Safe Regulations	Local Ordinance	Meets or Exceeds
Sec. 1272.00 Maintenance of Defensible Space Measures *Defensible space maintenance plans shall be provided.*	San Bernardino Ordinance Number 5048 "Ordinance Pertaining to the Abatement of Fire Hazards and Hazardous Trees and Fire Access Road Obstructions"	
Sec. 1273.00 Intent *Unobstructed traffic circulation during a wildfire emergency and concurrent fire equipment and civilian movement.*	CFC 503.4, as amended in SBCFPDFC page 26	
Sec. 1273.01 Road Width *Roads shall have a minimum of two 10-foot traffic lanes, not including shoulder and striping.*	CFC 503.2.1, as amended in SBCFPDFC page 24	
Sec. 1273.02 Roadway Surface *Designed and maintained to support the imposed load of fire apparatus weighing at least 75,000 pounds; provide an all-weather aggregate base; project proponent shall provide engineering specifications to support design if requested.*	CFC 503.2.3, as amended in SBCFPDFC page 24 through 25	
Sec. 1273.03 Roadway Grades *The grade of roads shall not exceed 16%.*	CFC 503.2.7, as amended in SBCFPDFC page 25	
Sec. 1273.04 Roadway Radius *Horizontal inside turning radius minimum 50 feet; additional 4 foot with added to curves of 50 to 100 foot radius; additional 2 feet shall be added to curves from 100 to 200 feet. Vertical curves no less than 100 feet.*	CFC 503.2.4 – Chapter 5, page 88 "shall be determined by the fire code official" Standard A-2 provides more specifics; minimum radius does not meet state regulation but may be approved as same practical effect - roadway + smaller radius is same as state standards	
Sec. 1273.05 Roadway Turnarounds *Required on driveways and dead-end roads. Minimum turning radius shall be 40 feet, not including parking.* *The top of the "T" in a hammerhead/T turnaround shall be 60 feet.*	No local ordinance or code to support this regulation. With some language clean up, Standard A-2 has this requirement.	
Sec. 1273.06 Roadway Turnouts *Shall be a minimum of 12 feet wide, 30 feet long, and a 25 foot taper at both ends.*	No local ordinance or code to support this regulation. Standard A-2 has turnout requirements.	

CCR Title 14 SRA Fire Safe Regulations	Local Ordinance	Meets or Exceeds
Sec. 1273.07 Roadway Structures *Designed to carry maximum load according to CVC; must have signage posting maximum weight and height; constructed and maintained according to AASHTO HB-17; one-way bridges must have unobstructed visibility and turnouts each end.*	CFC 503.2.6 – Chapter 5, page 88	
Sec. 1273.08 One-Way Roads *All one way roads will have a minimum 12 foot traffic lane, not including shoulders. All one-way roads shall connect a two lane roadway at both ends. Maximum access to no more than 10 dwelling units. Maximum length 2,640 feet. Turnout constructed at approximately mid-point.*	CFC 503.2.1, as amended in SBCFPDFC page 24 Exception (A) does not describe size of allowable traffic *lane*, only roadway	
Sec. 1273.09 Dead-End Roads *The length of dead-end roads is limited, based upon zoning.* *-800 feet for parcel zoned for less than one acre.* *-1320 feet for parcel zoned one to five acres* *-2640 feet for parcel zoned five acres to 20 acres* *-5280 feet for parcel zoned larger than 20 acres*	CFC 503.2.5 – Chapter 5, page 88 – requires turnaround if dead-end road is longer than 150 feet; no length requirements or limitation Standard A-2 has length requirements - 600 feet	
Sec. 1273.10 Driveways *All driveways will provide a minimum 10 foot width traffic lane with a minimum width of 14 feet unobstructed horizontal clearance and vertical clearance of 15 feet. Driveways greater than 150 feet but less than 800 feet shall provide a turnout near the midpoint; turnouts every 400 feet if driveway >800 feet. A turnaround is required on all building sites with driveways over 300 feet in length, sited within 50 feet of building.*	CFC 503.2.1, as amended in SBCFPDFC page 24 Exception (B) has no clearance requirements, no turnout requirements	

CCR Title 14 SRA Fire Safe Regulations	Local Ordinance	Meets or Exceeds
Sec. 1273.11 Gate Entrances *Gates shall be at least 2 feet wider than the width of the traffic lane. Minimum width of 14 feet unobstructed horizontal clearance and 15 feet vertical clearance. All gates shall be located 30 feet from the roadway shall provide unobstructed traffic access on the roadway. Security gates shall not be installed without approval. Where a one-way road provides access to a gated entrance, a 40 foot turning radius shall be used.*	CFC 503.1, 503.5.1 – Chapter 5, page 87 and 88; does not meet state regulation Standard A-3: minimum width of 20 feet of clearance when open, 12 feet for one way, driveways; 40 feet to street "when required" – standard practice is that the Fire Marshal always requires the 40 feet	
Sec. 1274.00 Intent *Roadways and buildings are to be clearly identified.*		
Sec. 1274.01 Size of Letters, Numbers and Symbols for Street and Road Signs *Size of letters and numbers on street signs to be minimum 4 inch height, 0.5 inch stroke, reflectorized and contrasting with background.*	County Standard Plan 303 and 303a – no stroke requirement but same practical effect may be acceptable as same practical effect given other design standards included.	
Sec. 1274.02 Visibility and Legibility of Street and Road Signs *Street signs to visible in both directions for a minimum distance of 100 feet.*	As written, County Standard Plan 303 does not have distance requirement but may be acceptable as same practical effect given other design standards included.	
Sec. 1274.03 Height of Street and Road Signs *Height of street signs to be uniform county wide.*	County Standard Plan 303b allows 8, 10, or 12 feet height – may be acceptable as same practical effect since the allowable height options are limited.	
Sec. 1274.04 Names and Numbers on Street and Road Signs *Streets to be identified in a consistent countywide system. Signs to be mounted in a uniform manner.*	Technically not a consistent countywide system/mounted in a uniform manner, but may be acceptable as same practical effect since the options are limited	
Sec. 1274.05 Intersecting Roads, Streets and Private Lanes *Street signs shall be at provided road intersections.*	Fire Safety Overlays correspond to CAL FIRE's Fire Hazard Severity Zones	
Sec. 1274.06 Signs Identifying Traffic Access Limitations *Shall be placed at the intersection preceding the*	San Bernardino County Fire providing more specific information on this from County Public Works.	

CCR Title 14 SRA Fire Safe Regulations	Local Ordinance	Meets or Exceeds
limitation, no more than 100 feet before the limitation		
Sec. 1274.07 Installation of Road, Street and Private Lane Signs *Street signs shall be installed prior to final acceptance by local jurisdiction for road improvements.*	Referenced code/standards does not include requirement for installation before final acceptance/approval of road improvements. Standard business practices provide for this.	
Sec. 1274.08 Addresses for Buildings *All buildings shall be addressed according to the jurisdiction's address system. Each dwelling unit shall be separately identified.*	CFC 505.1.5, as amended in SBCFPDFC page 28	
Sec. 1274.09 Size of Letters, Numbers and Symbols for Addresses *Letter and numbers for addresses must be minimum 4 inch high, 0.5 inch stroke and contrasting background. Address shall be visible from street.*	CFC 505.1.5, as amended in SBCFPDFC page 28 – height and stroke requirements do not meet state regulation; per phone call, height/stroke meant to be included in amended CFC language	
Sec. 1274.10 Installation, Location and Visibility of Addresses *All buildings must be clearly identified.* *Shall have a permanently posted address placed at each driveway entrance, visible from both directions of travel along road.* *Address shall be posted during construction and maintain thereafter.* *Address signs along one-way road shall be visible from both intended direction of travel and opposite direction.* *Multiple addresses on a single driveway shall be mounted on a single post.* *Addresses for single commercial business shall be placed at the nearest intersection providing access to the site.*	SBCFPDFC Section 2(e)(12) and 2(e)(13) (CFC 505.1 and subsections, as amended) – page 26 Does not quite meet state regulation for public visibility but may be approved as same practical effect. Does not meet requirement for stroke/height, visible from both directi ons along roadway, posting during construction, multiple addresses along a driveway.	

CCR Title 14 SRA Fire Safe Regulations	Local Ordinance	Meets or Exceeds
Sec. 1275.00 Intent *Emergency water for wildfire protection shall be available, accessible, and maintained.*		
Sec. 1275.01 Application *Emergency water systems shall be installed and made serviceable prior to and during the time of construction except for alternatives approved by the authority having jurisdiction.*	CFC 507.1, as amended in SBCFPDFC page 28 – Exceptions not provided for in state regulation but may be certified as same practical effect. May require some supporting documentation before certification granted. Submitted local ordinance does not require water supply during construction but standard business practice provides for this.	
Sec. 1275.10 General Standards *System must meet or exceed NFPA 1142 and California Fire Code fire flow requirements. Water may be provided in a mobile water tender or other containment structure. Nothing prohibits the combined storage of emergency wildfire and structural firefighting water supplies unless prohibited by local ordinance. Freeze protection when required.*	CFC 507.1 and subsections, as amended in SBCFPDFC page 28. Exceptions not provided for in state regulation but may be certified as same practical effect.	
Sec. 1275.15 Hydrant/Fire Valve *Hydrant shall be 18 inch above ground, 8 feet from vegetation, no closer than 4 feet nor farther than 12 feet from roadway, in a location were fire apparatus will not block the roadway.* *Hydrant servicing an a building shall be not less than 50 feet nor more than ½ mile by road from building it serves and be located at a turnaround along the driveway or road that intersects the driveway.* *Headed with a 2 ½ inch National Hose male thread with cap for pressure and gravity flow systems and 4 ½ inch draft system.* *Hydrant shall have wet or dry barrel and shall have suitable crash protection required by local jurisdiction.*	CFC 507.5.1, as amended – 300 feet Exception (B) – exception not provided for in state regulation but may be approved as same practical effect. May require supporting information/examples before certification granted. Most components of this regulation missing from submitted local ordinance. The supplied Fire Safety Standards W-1 and Standard W-2 are alternate guidelines to NFPA 1142 and 24. NFPA 24 not referenced in code text.	
Sec. 1275.20 Signing of Water Sources	No local ordinance or code to support this regulation. May require	

CCR Title 14 SRA Fire Safe Regulations	Local Ordinance	Meets or Exceeds
If located along a driveway: marked with a 3 inch reflectorized blue marker on the driveway address sign and mounted on a fire retardant post. *If located on a street or road: 3 inch marker shall be mounted on a fire retardant post within 3 feet of hydrant, no less than 3 feet nor greater than 5 feet above the ground* *Or specified in the OSFM's Guidelines for Fire Hydrant Markings Along State Highways and Freeways, May 1988.*	supporting information/examples before certification granted. The supplied Fire Safety Standards W-1 and Standard W-2 are alternate guidelines to NFPA 1142 and 24. NFPA 24 not referenced in code text.	
Sec. 1276.00 Intent *Reduce the intensity of wildfire through fuel modification for safe emergency operations and civilian evacuation and to establish a point of attack or defense from a wildfire.*		
Sec. 1276.01 Setback for Structure Defensible Space *Parceled one acre or larger provide a minimum 30 foot setback.* *Parcels less than one acre, local jurisdiction shall provide same practical effect.*	Setbacks in Development Code 82.13 Fire Safety Overlay (page 2-91) do not meet minimum requirements and only apply to FS Overlay areas. Other setback requirements throughout Development Code do not meet 30 foot minimum.	
Sec. 1276.02 Disposal of Flammable Vegetation and Fuels *Disposal of flammable vegetation and fuel modification to be done prior to final building inspection.*	San Bernardino Ordinance Number 5048 "Ordinance Pertaining to the Abatement of Fire Hazards and Hazardous Trees and Fire Access Road Obstructions"	
Sec. 1276.03 Greenbelts *Subdivisions and other developments, which propose greenbelts as part of their plan, shall locate the greenbelts strategically. The locations shall be approved by the local authority having jurisdiction and may be consistent with the CAL FIRE Unit Fire Management Plan or Contract County Fire Plan.*	There is a definition for fuel break (page 10-46.3 in Development Code) but no requirement for strategic planning.	

CALIFORNIA BOARD OF FORESTRY AND FIRE PROTECTION

SRA FIRE SAFE REGULATIONS

As of January 1, 2016

California Code of Regulations
Title 14 Natural Resources
Division 1.5 Department of Forestry
Chapter 7 - Fire Protection
Subchapter 2 SRA Fire Safe Regulations
Article 1 | Article 2 | Article 3 | Article 4 | Article 5 | Index

ARTICLE 1. ADMINISTRATION

§ 1270.00. Title
§ 1270.01. Purpose
§ 1270.02. Scope
§ 1270.03. Local Ordinances
§ 1270.04. Provisions for Application of these Regulations
§ 1270.05. Inspection Authority
§ 1270.06. Inspections
§ 1270.07. Exceptions to Standards
§ 1270.08. Request for Exceptions
§ 1270.09. Appeals
§ 1271.00. Definitions
§ 1271.05. Distance Measurements
§ 1272.00. Maintenance of Defensible Space Measures

ARTICLE 2. EMERGENCY ACCESS AND EGRESS

§ 1273.00. Intent
§ 1273.01. Road Width
§ 1273.02. Roadway Surface
§ 1273.03. Roadway Grades
§ 1273.04. Roadway Radius
§ 1273.05. Roadway Turnarounds
§ 1273.06. Roadway Turnouts
§ 1273.07. Roadway Structures
§ 1273.08. One-Way Roads
§ 1273.09. Dead-End Roads
§ 1273.10. Driveways
§ 1273.11. Gate Entrances

ARTICLE 3. SIGNING AND BUILDING NUMBERING

§ 1274.00. Intent
§ 1274.01. Size of Letters, Numbers and Symbols for Street and Roads Signs
§ 1274.02. Visibility and Legibility of Street and Road Signs
§ 1274.03. Height of Street and Road Signs
§ 1274.04. Names and Numbers on Street and Road Signs
§ 1274.05. Intersecting Roads, Streets and Private Lanes
§ 1274.06. Signs Identifying Traffic Access Limitations
§ 1274.07. Installation of Road, Street and Private Lane Signs
§ 1274.08. Addresses for Buildings
§ 1274.09. Size of Letters, Numbers and Symbols for Addresses
§ 1274.10. Installation, Location and Visibility of Addresses

ARTICLE 4. EMERGENCY WATER STANDARDS

§ 1275.00. Intent
§ 1275.01. Application
§ 1275.10. General Standards
§ 1275.15. Hydrant/Fire Valve
§ 1275.20. Signing of Water Sources

ARTICLE 5. FUEL MODIFICATION STANDARDS

§ 1276.00. Intent
§ 1276.01. Setback for Structure Defensible Space
§ 1276.02. Disposal of Flammable Vegetation and Fuels
§ 1276.03. Greenbelts

Authority cited
NOTE: Authority cited: Section 4290, Public Resources Code. Reference: Sections 4290 and 4291, Public Resources Code.
History
1. New sections filed 5/30/91; operative 5/30/91 pursuant to Government Code section 11346.2(d) (Register 91, No.27)
2. Amendments filed 1-31-2013; operative 4-1-2013 (Register 2013, No. 5)
3. Amendments filed 4-27-2015; operative 1-1-2016 (Register 2015, No. 18)

ARTICLE 1. ADMINISTRATION

§ 1270.00. Title
§ 1270.01. Purpose
§ 1270.02. Scope
§ 1270.03. Local Ordinances
§ 1270.04. Provisions for Application of these Regulations
§ 1270.05. Inspection Authority
§ 1270.06. Inspections
§ 1270.07. Exceptions to Standards
§ 1270.08. Request for Exceptions
§ 1270.09. Appeals
§ 1271.00. Definitions
§ 1271.05. Distance Measurements
§ 1272.00. Maintenance of Defensible Space Measures

1270.00. Title

These regulations shall be known as “SRA Fire Safe Regulations,” and shall constitute the basic wildland fire protection standards of the California Board of Forestry.

1270.01. Purpose

These regulations have been prepared and adopted for the purpose of establishing minimum wildfire protection standards in conjunction with building, construction and development in SRA. A local jurisdiction may petition the Board for certification pursuant to section 1270.03. Where Board certification has not been granted, these regulations shall become effective September 1, 1991. The future design and construction of structures, subdivisions and developments in State Responsibility Area (SRA) shall provide for basic emergency access and perimeter wildfire protection measures as specified in the following articles. These measures shall provide for emergency access; signing and building numbering; private water supply reserves for emergency fire use; and vegetation modification. The fire protection standards which follow shall specify the minimums for such measures.

1270.02. Scope

(a) These regulations shall apply to:
(1) the perimeters and access to all residential, commercial, and industrial building construction within SRA approved after January 1, 1991 except as set forth below in subsection b.);
(2) all tentative and parcel maps or other developments approved after January 1, 1991; and
(3) applications for building permits on a parcel approved in a pre-1991 parcel or tentative map to the extent that conditions relating to the perimeters and access to the buildings were not imposed as part of the approval of the parcel or tentative map.

(b) These regulations do not apply where an application for a building permit is filed after January 1, 1991 for building construction on a parcel that was formed from a parcel map or tentative map (if the final map for the tentative map is approved within the time prescribed by the local ordinance) approved prior to January 1, 1991, to the extent that conditions relating to the perimeters and access to the buildings were imposed by the parcel map or final tentative map approved prior to January 1, 1991.

(c) Affected activities include, but are not limited to:

(1) permitting or approval of new parcels, excluding lot line adjustments as specified in Government Code (GC) section 66412(d),
(2) application for a building permit for new construction, not relating to an existing structure,
(3) application for a use permit,
(4) the siting of manufactured homes (manufactured homes are as defined by the National Fire Protection Association, National Fire Code, section 501A, Standard for Fire Safety Criteria for Manufactured Home Installations, Sites and Communities, chapter 1, section 1-2, Definitions, page 4, 1987 edition and Health and Safety Code sections 18007, 18008, and 19971).
(5) road construction, including construction of a road that does not currently exist, or extension of an existing road.

(d) EXEMPTION: Roads used solely for agricultural or mining use and roads used solely for the management and harvesting of wood products.

1270.03. Local Ordinances

Nothing contained in these regulations shall be considered as abrogating the provisions of any ordinance, rule or regulation of any state or local jurisdiction providing such ordinance, rule, regulation or general plan element is equal to or more stringent than these minimum standards. The Board may certify local ordinances as equaling or exceeding these regulations when they provide the same practical effect. The Board's certification of local ordinances pursuant to this section is rendered invalid when previously certified ordinances are subsequently amended by local jurisdictions without Board re-certification of the amended ordinances. The Board's regulations supersede the amended local ordinance(s) when the amended local ordinance(s) are not re-certified by the Board. Amendments made by local jurisdictions to previously certified ordinances shall be re-certified as described in 14 CCR §§ 1270.01 and 1270.03.

1270.04. Provisions for Application of these Regulations

This subchapter shall be applied as follows:

(a) local jurisdictions shall provide the Director with notice of applications for building permits, tentative parcel maps, tentative maps, and use permits for construction or development within SRA.

(b) the Director shall review and make fire protection recommendations on applicable construction or development or maps provided by the local jurisdiction.

(c) the local jurisdiction shall ensure that the applicable sections of this subchapter become a condition of approval of any applicable construction of development permit or map.

1270.05. Inspection Authority

(a) Inspection shall be made pursuant to section 1270.06 by:
(1) the Director, or
(2) local jurisdictions that have assumed state fire protection responsibility on SRA lands, or
(3) local jurisdictions where these regulations have been incorporated verbatim into that jurisdiction's building permit or subdivision approval process and the inspection duties have been formally delegated by CAL FIRE to the local jurisdiction, or
(4) local jurisdictions where the local ordinances have been certified pursuant to 14 CCR §§ 1270.01 and 1270.03 and the inspection duties have been formally delegated by CAL FIRE to the local jurisdiction.

(b) Nothing in this section abrogates CAL FIRE's authority to inspect and enforce state forest and fire laws even when the inspection duties have been delegated pursuant to this section.

(c) Reports of violations shall be provided to the CAL FIRE Unit headquarters that administers SRA fire protection in the local jurisdiction.

1270.06. Inspections

The inspection entity listed in 14 CCR 1270.05 may inspect for compliance with these regulations. When inspections are conducted, they should occur prior to: the issuance of the use permit; certificate of occupancy; the recordation of the parcel map or final map; the filing of a notice of completion; or the final inspection of any project or building permit.

1270.07. Exceptions to Standards

Upon request by the applicant, exceptions to standards within this subchapter or local jurisdiction certified ordinances may be allowed by the inspection entity listed in 14 CCR 1270.05, where the exceptions provide the same overall practical effect as these regulations towards providing defensible space. Exceptions granted by the inspection entity listed in 14 CCR 1270.05 shall be made on a case-by-case basis only. Exceptions granted by the inspection entity listed in 14 CCR 1270.05 shall be forwarded to the appropriate CAL FIRE Unit Office that administers SRA fire protection in that county and shall be retained on file at the Unit Office.

1270.08. Request for Exceptions

Requests for an exception shall be made in writing to the inspection entity listed in 14 CCR 1270.05 by the applicant or the applicant's authorized representative. The request shall state the specific section(s) for which an exception is requested, material facts supporting the contention of the applicant, the details of the exception proposed, and a map showing the proposed location and siting of the exception.

1270.09. Appeals

Where an exception is not granted by the inspection authority, the applicant may appeal such denial to the local jurisdiction. The local jurisdiction may establish or utilize an appeal process consistent with existing local building or planning department appeal processes.

Before the local jurisdiction makes a determination on an appeal, the inspection authority shall be consulted and shall provide to that local jurisdiction documentation outlining the effects of the requested exception on wildland fire protection.

If an appeal is granted, the local jurisdiction shall make findings that the decision meets the intent of providing defensible space consistent with these regulations. Such findings shall include a statement of reasons for the decision. A written copy of these findings shall be provided to the CAL FIRE Unit headquarters that administers SRA fire protection in that local jurisdiction.

1271.00. Definitions

Accessory building: Any building used as an accessory to residential, commercial, recreational, industrial, or educational purposes as defined in the California Building Code, 1989 Amendments, Chapter 11, Group M, Division 1 Occupancy that requires a building permit.

Agriculture: Land used for agricultural purposes as defined in a local jurisdiction's zoning ordinances.

Building: Any structure used or intended for supporting or sheltering any use of occupancy that is defined in the California Building Code, 1989 Amendments, Chapter 11, except Group M, Division 1 , Occupancy. For the purposes of this subchapter, building includes mobile homes and manufactured homes, churches, and day care facilities.

CDF: California Department of Forestry and Fire Protection.

Dead-end road: A road that has only one point of vehicular ingress/egress, including cul-de- sacs and looped roads.

Defensible space: The area within the perimeter of a parcel, development, neighborhood or community where basic wildland fire protection practices and measures are implemented, providing the key point of defense from an

approaching wildfire or defense against encroaching wildfires or escaping structure fires. The perimeter as used in this regulation is the area encompassing the parcel or parcels proposed for construction and/or development, excluding the physical structure itself. The area is characterized by the establishment and maintenance of emergency vehicle access, emergency water reserves, street names and building identification, and fuel modification measures.

Development: As defined in Section 66418.1 of the California Government Code.

Director: Director of the Department of Forestry and Fire Protection or his/her designee.

Driveway: A vehicular access that serves no more than two buildings, with no more than three dwelling units on a single parcel, and any number of accessory buildings.

Dwelling unit: Any building or portion thereof which contains living facilities, including provisions for sleeping, eating, cooking and/or sanitation for not more than one family.

Exception: An alternative to the specified standard requested by the applicant that may be necessary due to health, safety, environmental conditions, physical site limitations or other limiting conditions such as recorded historical sites, that provide mitigation of the problem.

Fire valve: See hydrant.

Fuel modification area: An area where the volume of flammable vegetation has been reduced, providing reduced fire intensity and duration.

Greenbelts: A facility or land-use, designed for a use other that fire protection, which will slow or resist the spread of a wildfire. Includes parking lots, irrigated or landscaped areas, golf courses, parks, playgrounds, maintained vineyards, orchards or annual crops that do not cure in the field.

Hammerhead/T: A roadway that provides a "T" shaped, three-point turnaround space for emergency equipment, being no narrower that the road that serves it.

Hydrant: A valved connection on a water supply/storage system, having at least one 2 1/2 inch outlet, with male American National Fire Hose Screw Threads (NH) used to supply fire apparatus and hoses with water.

Local Jurisdiction: Any county, city/county agency or department, or any locally authorized district that issues or approves building permits, use permits, tentative maps or tentative parcel maps, or has authority to regulate development and construction activity.

Occupancy: The purpose for which a building, or part thereof, is used or intended to be used.

One-way road: A minimum of one traffic lane width designed for traffic flow in one direction only.

Roads, streets, private lanes: Vehicular access to more than one parcel; access to any industrial or commercial occupancy; or vehicular access to a single parcel with more than two buildings or four or more dwelling units.

Roadway: Any surface designed, improved, or ordinarily used for vehicle travel.

Roadway structures: Bridges, culverts, and other appurtenant structures which supplement the roadway bed or shoulders.

Same Practical Effect: As used in this subchapter means an exception or alternative with the capability of applying accepted wildland fire suppression strategies and tactics, and provisions for fire fighter safety, including:
(a) access for emergency wildland fire equipment,
(b) safe civilian evacuation,
(c) signing that avoids delays in emergency equipment response,
(d) available and accessible water to effectively attack wildfire or defend a structure from wildfire, and
(e) fuel modification sufficient for civilian and fire fighter safety.

State Board of Forestry (SBOF): A nine member board, appointed by the Governor, which is responsible for developing the general forest policy of the state, for determining the guidance policies of the Department of Forestry and Fire Protection, and for representing the state's interest in federal land in California.

State Responsibility Area (SRA): As defined in the Public Resources Code section 4126-4127; and the California Code of Regulations, Title 14, Division 1.5, Chapter 7, Article 1, Sections 1220-1220.5.

Structure: That which is built or constructed, an edifice or building of any kind, or any piece of work artificially built up or composed of parts joined together in some definite manner.

Subdivision: As defined in Section 66424 of the Government Code.

Traffic lane: The portion of a roadway that provides a single line of vehicle travel.

Turnaround: A roadway, unobstructed by parking, which allows for a safe opposite change of direction for emergency equipment. Design of such area may be a hammerhead/T or terminus bulb.

Turnouts: A widening in a roadway to allow vehicles to pass.

Vertical clearance: The minimum specified height of a bridge or overhead projection above the roadway.

Wildfire: As defined in Public Resources Code Section 4103 and 4104.

1271.05. Distance Measurements

All specified or referenced distances are measured along the ground, unless otherwise stated.

1272.00. Maintenance of Defensible Space Measures

To ensure continued maintenance of properties in conformance with these standards and measures and to assure continue availability, access, and utilization of the defensible space provided for these standards during a wildfire, provisions for annual maintenance shall be included in the development plans and/or shall be provided as a condition of the permit, parcel or map approval.

ARTICLE 2. EMERGENCY ACCESS AND EGRESS

§ 1273.00. Intent
§ 1273.01. Road Width
§ 1273.02. Roadway Surface
§ 1273.03. Roadway Grades
§ 1273.04. Roadway Radius
§ 1273.05. Roadway Turnarounds
§ 1273.06. Roadway Turnouts
§ 1273.07. Roadway Structures
§ 1273.08. One-Way Roads
§ 1273.09. Dead-End Roads
§ 1273.10. Driveways
§ 1273.11. Gate Entrances

1273.00. Intent

Road and street networks, whether public or private, unless exempted under section 1270.02(e), shall provide for safe access for emergency wildland fire equipment and civilian evacuation concurrently, and shall provide unobstructed traffic circulation during a wildfire emergency consistent with Sections 1273.00 through 1273.11.

1273.01. Road Width

All roads shall be constructed to provide a minimum of two ten (10) foot traffic lanes, not including shoulder and

striping. These traffic lanes shall provide for two-way traffic flow to support emergency vehicle and civilian egress, unless other standards are provided in this article, or additional requirements are mandated by local jurisdictions or local subdivision requirements.

1273.02. Roadway Surface

Roadways shall be designed and maintained to support the imposed load of fire apparatus weighing at least 75,000 pounds and provide an aggregate base. Project proponent shall provide engineering specifications to support design, if requested by the local authority having jurisdiction.

1273.03. Roadway Grades

The grade for all roads, streets, private lanes and driveways shall not exceed 16 percent.

1273.04. Roadway Radius

(a) No roadway shall have a horizontal inside radius of curvature of less than 50 feet and additional surface width of 4 feet shall be added to curves of 50-100 feet radius; 2 feet to those from 100-200 feet.

(b) The length of vertical curves in roadways, exclusive of gutters, ditches, and drainage structures designed to hold or divert water, shall be not less than 100 feet.

1273.05. Roadway Turnarounds

Turnarounds are required on driveways and dead-end roads. The minimum turning radius for a turnaround shall be forty (40) feet, not including parking, in accordance with the following figure. If a hammerhead/T is used instead, the top of the “T” shall be a minimum of sixty (60) feet in length.

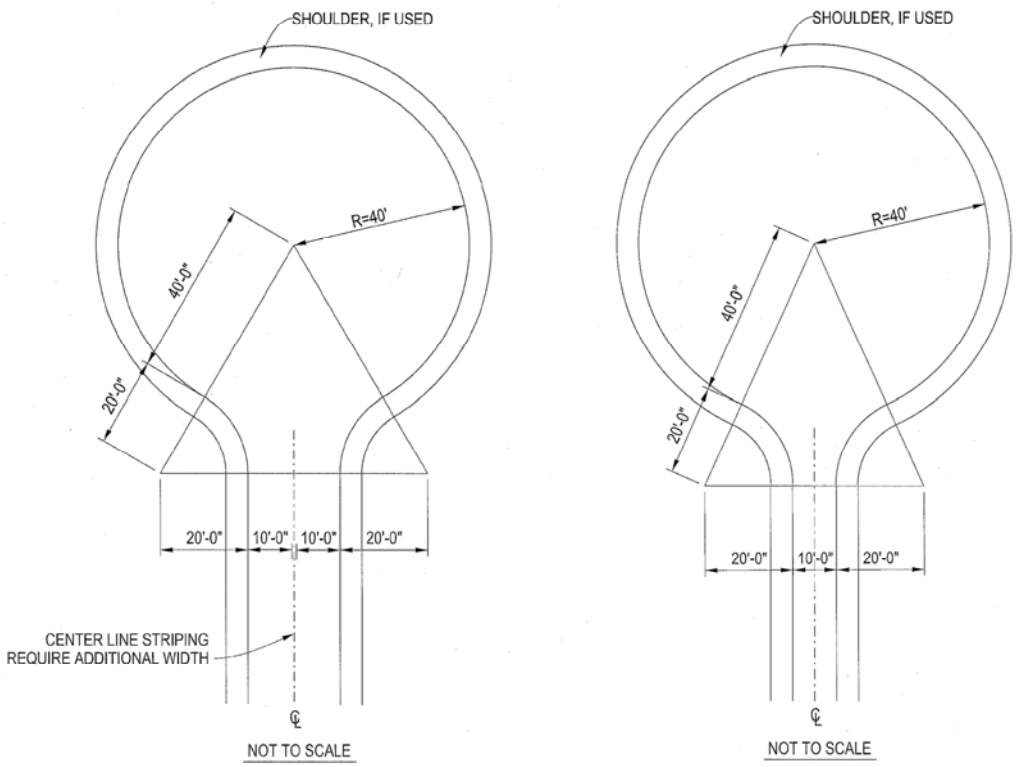

FIGURE FOR 14 CCR § 1273.05. TURNAROUND EXAMPLES

1273.06. Roadway Turnouts

Turnouts shall be a minimum of twelve (12) feet wide and thirty (30) feet long with a minimum twenty-five (25) foot taper on each end.

1273.07. Roadway Structures

(a) All driveway, road, street, and private lane roadway structures shall be constructed to carry at least the maximum load and provide the minimum vertical clearance as required by Vehicle Code Sections 35250, 35550, and 35750.

(b) Appropriate signing, including but not limited to weight or vertical clearance limitations, one-way road or single lane conditions, shall reflect the capability of each bridge.

(c) Where a bridge or an elevated surface is part of a fire apparatus access road, the bridge shall be constructed and maintained in accordance with the American Association of State and Highway Transportation Officials Standard Specifications for Highway Bridges, 17th Edition, published 2002 (known as AASHTO HB-17), hereby incorporated by reference. Bridges and elevated surfaces shall be designed for a live load sufficient to carry the imposed loads of fire apparatus. Vehicle load limits shall be posted at both entrances to bridges when required by the local authority having jurisdiction. Where elevated surfaces designed for emergency vehicle use are adjacent to surfaces which are not designed for such use, barriers, or signs, or both, as approved by the local authority having jurisdiction, shall be installed and maintained. A bridge with only one traffic lane may be authorized by the local jurisdiction; however, it shall provide for unobstructed visibility from one end to the other and turnouts at both ends.

1273.08. One-Way Roads

All one-way roads shall be constructed to provide a minimum, not including shoulders, of one twelve (12) foot traffic lane. The local jurisdiction may approve one-way roads. All one-way roads shall connect to a two-lane roadway at both ends, and shall provide access to an area currently zoned for no more than ten (10) dwelling units. In no case shall it exceed 2,640 feet in length. A turnout shall be placed and constructed at approximately the midpoint of each one-way road.

1273.09. Dead-End Roads

(a) The maximum length of a dead-end road, including all dead-end roads accessed from the dead-end road, shall not exceed the following cumulative lengths, regardless of the numbers of parcels served:
parcels zoned for less than one acre – 800 feet
parcels zoned for 1 acre to 4.99 acres – 1320 feet
parcels zoned for 5 acres to 19.99 acres – 2640 feet
parcels zoned for 20 acres or larger – 5280 feet

All lengths shall be measured from the edge of the roadway surface at the intersection that begins the road to the end of the road surface at the intersection that begins the road to the end of the road surface at its farthest point. Where a dead-end road crosses areas of differing zoned parcel sizes, requiring different length limits, the shortest allowable length shall apply.

(b) Where parcels are zoned 5 acres or larger, turnarounds shall be provided at a maximum of 1320 foot intervals.

(c) Each dead-end road shall have a turnaround constructed at its terminus.

1273.10. Driveways

(a) All driveways shall be constructed to provide a minimum of one (1) ten (10) foot traffic lane and fourteen (14) feet unobstructed horizontal clearance and unobstructed vertical clearance of fifteen (15) feet.

(b) Driveways exceeding 150 feet in length, but less than 800 feet in length, shall provide a turnout near the

midpoint of the driveway. Where the driveway exceeds 800 feet, turnouts shall be provided no more than 400 feet apart.

(c) A turnaround shall be provided to all building sites on driveways over 300 feet in length, and shall be within fifty (50) feet of the building.

1273.11. Gate Entrance

(a) Gate entrances shall be at least two (2) feet wider than the width of the traffic lane(s) serving that gate and a minimum width of fourteen (14) feet unobstructed horizontal clearance and unobstructed vertical clearance of fifteen (15) feet.

(b) All gates providing access from a road to a driveway shall be located at least thirty (30) feet from the roadway and shall open to allow a vehicle to stop without obstructing traffic on that road.

(c) Security gates shall not be installed without approval and where security gates are installed, they shall have an approved means of emergency operation. Approval shall be by the local authority having jurisdiction. The security gates and the emergency operation shall be maintained operational at all times.

(d) Where a one-way road with a single traffic lane provides access to a gated entrance, a forty (40) foot turning radius shall be used.

ARTICLE 3. SIGNING AND BUILDING NUMBERING

§ 1274.00. Intent
§ 1274.01. Size of Letters, Numbers and Symbols for Street and Roads Signs
§ 1274.02. Visibility and Legibility of Street and Road Signs
§ 1274.03. Height of Street and Road Signs
§ 1274.04. Names and Numbers on Street and Road Signs
§ 1274.05. Intersecting Roads, Streets and Private Lanes
§ 1274.06. Signs Identifying Traffic Access Limitations
§ 1274.07. Installation of Road, Street and Private Lane Signs
§ 1274.08. Addresses for Buildings
§ 1274.09. Size of Letters, Numbers and Symbols for Addresses
§ 1274.10. Installation, Location and Visibility of Addresses

1274.00. Intent

To facilitate locating a fire and to avoid delays in response, all newly constructed or approved roads, street, and buildings shall be designated by names or numbers, posted on signs clearly visible and legible from the roadway. This section shall not restrict the size of letters of numbers appearing on street signs for other purposes.

1274.01. Size of Letters, Numbers and Symbols for Street and Roads Signs

Size of letters, numbers, and symbols for street and road signs shall be a minimum 4 inch letter height, .5 inch stroke, reflectorized, contrasting with the background color of the sign.

1274.02. Visibility and Legibility of Street and Road Signs

Street and road signs shall be visible and legible from both directions of vehicle travel for a distance of at least 100 feet.

1274.03. Height of Street and Road Signs

Height of street and road signs shall be uniform county wide, and meet the visibility and legibility standards of this article.

1274.04. Names and Numbers on Street and Road Signs

Newly constructed or approved public and private roads and streets must be identified by a name or number through a consistent countywide system that provides for sequenced or patterned numbering and/or non-duplicating naming within each county. All signs shall be mounted and oriented in a uniform manner. This section does not require any entity to rename or renumber existing roads or streets, nor shall a roadway providing access only to a single commercial or industrial occupancy require naming or numbering.

1274.05. Intersecting Roads, Streets and Private Lanes

Signs required by this article identifying intersecting roads, streets and private lanes shall be placed at the intersection of those roads, streets, and/or private lanes.

1274.06. Signs Identifying Traffic Access Limitations

A sign identifying traffic access or flow limitations, including but not limited to weight or vertical clearance limitations, dead-end road, one-way road or single lane conditions, shall be placed:

(a) at the intersection preceding the traffic access limitation, and

(b) no more than 100 feet before such traffic access limitation.

1274.07. Installation of Road, Street and Private Lane Signs

Road, street and private lane signs required by this article shall be installed prior to final acceptance by the local jurisdiction of road improvements.

1274.08. Addresses for Buildings

All buildings shall be issued an address by the local jurisdiction which conforms to that jurisdiction's overall address system. Accessory buildings will not be required to have a separate address; however, each dwelling unit within a building shall be separately identified.

1274.09. Size of Letters, Numbers and Symbols for Addresses

Size of letters, numbers and symbols for addresses shall be a minimum 4 inch letter height, .5 inch stroke, reflectorized, contrasting with the background color of the sign.

Address identification shall be plainly legible and visible from the street or road fronting the property. Addresses shall be Arabic numbers or alphabetical letters. Where access is by means of a private road and the address identification cannot be viewed from the public way, a monument, pole or other sign or means shall be used to identify the address.

1274.10. Installation, Location and Visibility of Addresses

(a) All buildings shall have a permanently posted address, which shall be placed at each driveway entrance and visible from both directions of travel along the road. In all cases, the address shall be posted at the beginning of construction and shall be maintained thereafter, and the address shall be visible and legible from the road on which the address is located.

(b) Address signs along one-way roads shall be visible from both the intended direction of travel and the opposite direction.

(c) Where multiple addresses are required at a single driveway, they shall be mounted on a single post.

(d) Where a roadway provides access solely to a single commercial or industrial business, the address sign shall be placed at the nearest road intersection providing access to that site.

ARTICLE 4. EMERGENCY WATER STANDARDS

§ 1275.00. Intent
§ 1275.01. Application
§ 1275.10. General Standards
§ 1275.15. Hydrant/Fire Valve
§ 1275.20 Signing of Water Sources

1275.00. Intent

Emergency water for wildfire protection shall be available, accessible, and maintained in quantities and locations specified in the statute and these regulations, in order to attack a wildfire or defend property from a wildfire.

1275.01. Application

The provisions of this article shall apply in the tentative and parcel map process when new parcels are approved by the local jurisdiction having authority. When a water supply for structure defense is required to be installed, such protection shall be installed and made serviceable prior to and during the time of construction except when alternative methods of protection are provided and approved by the local authority having jurisdiction.

1275.10. General Standards

Water systems that comply with the below standard or standards meet or exceed the intent of these regulations. Water systems equaling or exceeding the National Fire Protection Association (NFPA) 1142, "Standard on Water Supplies for Suburban and Rural Fire Fighting," 2012 Edition, hereby incorporated by reference, and California Fire Code, California Code of Regulations title 24, part 9, shall be accepted as meeting the requirements of this article. Such emergency water may be provided in a fire agency mobile water tender, or naturally occurring or man made containment structure, as long as the specified quantity is immediately available. Nothing in this article prohibits the combined storage of emergency wildfire and structural firefighting water supplies unless so prohibited by local ordinance or specified by the local fire agency. Where freeze protection is required by local jurisdictions having authority, such protection measures shall be provided.

1275.15. Hydrant/Fire Valve

(a) The hydrant or fire valve shall be eighteen (18) inches above grade, eight (8) feet from flammable vegetation, no closer than four (4) feet nor farther than twelve (12) feet from a roadway, and in a location were fire apparatus using it will not block the roadway.
The hydrant serving any building shall:

(1) be not less than fifty (50) feet nor more than 1/2 mile by road from the building it is to serve, and
(2) be located at a turnout or turnaround, along the driveway to that building or along the road that intersects with that driveway.

(b) The hydrant head shall be 2 1/2 inch National Hose male thread with cap for pressure and gravity flow systems and 4 1/2 inch draft systems. Such hydrants shall be wet or dry barrel as required by the delivery system. They shall have suitable crash protection as required by the local jurisdiction.

1275.20 Signing of Water Sources

Each hydrant/fire valve or access to water shall be identified as follows:
(a) If located along a driveway, a reflectorized blue marker, with a minimum dimension of 3 inches shall be located on the driveway address sign and mounted on a fire retardant post, or

(b) If located along a street or road,

(1) a reflectorized blue marker, with a minimum dimension of 3 inches, shall be mounted on a fire retardant post. The sign post shall be within 3 feet of said hydrant/fire valve, with the sign no less than 3 feet nor greater than 5 feet above ground, in a horizontal position and visible from the driveway, or
(2) as specified in the State Fire Marshal's Guidelines for Fire Hydrant Markings Along State Highways and Freeways, May 1988.

ARTICLE 5. FUEL MODIFICATION STANDARDS

§ 1276.00. Intent
§ 1276.01. Setback for Structure Defensible Space
§ 1276.02. Disposal of Flammable Vegetation and Fuels
§ 1276.03. Greenbelts

1276.00 Intent

To reduce the intensity of a wildfire by reducing the volume and density of flammable vegetation, the strategic siting of fuel modification and greenbelt shall provide

(1) increased safety for emergency fire equipment and evacuating civilians by its utilization around structures and roads, including driveways; and

(2) a point of attack or defense from a wildfire.

1276.01 Setback for Structure Defensible Space

(a) All parcels 1 acre and larger shall provide a minimum 30 foot setback for buildings and accessory buildings from all property lines and/or the center of the road.

(b) For parcels less than 1 acre, the local jurisdiction shall provide for the same practical effect.

1276.02 Disposal of Flammable Vegetation and Fuels

Disposal, including chipping, burying, burning or removal to a landfill site approved by the local jurisdiction, of flammable vegetation and fuels caused by site development and construction, road and driveway construction, and fuel modification shall be completed prior to completion of road construction or final inspection of a building permit.

1276.03 Greenbelts

Subdivision and other developments, which propose greenbelts as a part of the development plan, shall locate said greenbelts strategically, as a separation between wildland fuels and structures. The locations shall be approved by the local authority having jurisdiction and may be consistent with the CAL FIRE Unit Fire Management Plan or Contract County Fire Plan.

REPORT/RECOMMENDATION TO THE BOARD OF DIRECTORS OF THE SAN BERNARDINO COUNTY FIRE PROTECTION DISTRICT AND RECORD OF ACTION

July 8, 2014

FROM: **MARK A. HARTWIG, Fire Chief/Fire Warden**
San Bernardino County Fire Protection District

SUBJECT: **ADOPTION AND AMENDMENT OF THE 2013 EDITIONS OF THE CALIFORNIA FIRE AND RESIDENTIAL CODES**

RECOMMENDATION(S)

Acting as the governing body of the San Bernardino County Fire Protection District, adopt and amend ordinance relating to the 2013 Editions of the California Fire and Residential Codes **(Ordinance No. FPD 14-03)** which were originally introduced on June 3, 2014 (Item No. 88) and continued to June 24, 2014 (Item No. 120).
(Presenter: Mark A. Hartwig, Fire Chief/Fire Warden, 387-5779)

BACKGROUND INFORMATION

The ordinance relating to the Adoption and Amendment of the 2013 Editions of the California Fire and Residential Codes were introduced on June 3, 2014, Item No. 88 and continued to June 24, 2014, Item No. 120 for public hearing. The recommendation before the Board of Directors today will adopt the ordinance on the Consent Calendar.

cc: w/ordinance
SBCFPD-Hartwig
County Counsel-Hardy
File - SBCFPD w/attach
jr 7/10/14

ITEM 64

Record of Action of the Board of Directors

APPROVED (CONSENT CALENDAR)
COUNTY OF SAN BERNARDINO
San Bernardino County Fire Protection District

MOTION	AYE	AYE	SECOND	MOVE	AYE
	1	2	3	4	5

LAURA H. WELCH, SECRETARY

BY _____

DATED: July 08, 2014

Rev 2-25-14

ORDINANCE NO. FPD 14-03

AN ORDINANCE OF THE BOARD OF DIRECTORS OF THE SAN BERNARDINO COUNTY FIRE PROTECTION DISTRICT, STATE OF CALIFORNIA, ADOPTING SAN BERNARDINO COUNTY FIRE CODE (REFERENCING THE 2013 EDITION OF THE CALIFORNIA FIRE CODE AND 2013 EDITION OF THE CALIFORNIA RESIDENTIAL CODE) ALONG WITH CERTAIN CHANGES, MODIFICATIONS, AMENDMENTS, ADDITIONS, DELETIONS, AND EXCEPTIONS, RELATING TO FIRE REGULATIONS.

The Board of Directors of the San Bernardino County Fire Protection District, State of California, ordains as follows:

SECTION 1. This ordinance is hereby enacted as the San Bernardino County Fire Protection District Fire Code, to read:

SAN BERNARDINO COUNTY FIRE PROTECTION DISTRICT CODE

Sections:

1. **Findings and Adoption of the California Fire Code and California Residential Code.**
2. **Amendments to the California Fire Code.**
3. **Amendments to the California Residential Code.**
4. **Referenced Codes and Standards.**
5. **Conflicting Provisions.**
6. **Validity and Severability.**
7. **No Liability or Warranty.**
8. **Authority - General.**
9. **Authority at Fires and Other Emergencies.**
10. **Authority to Inspect, Issue Notices and Administrative Citations or**

Abate a Public Nuisance.
11. Closure of Public and Private Lands.
12. Interference Unlawful.
13. Official Records.
14. Permits Required.
15. Fees.
16. Applications and Permits – Abandonment, Period of Validity, Expiration and Extensions.
17. Permits not Transferable.
18. Permit Revocation.
19. Operation or Construction Without a Permit or With an Expired or Revoked Permit.
20. Issuance of Stop Work Orders.
21. Failure to Comply with a Stop Work Order.
22. Service of Notices and Orders.
23. Tampering with Notices, Orders or Seals Unlawful.
24. Overcrowding Unlawful.
25. Obstructed Egress Unlawful.
26. Open Fires.
27. Explosives, Fireworks, Pyrotechnics, Rockets and Rocket Motors.
28. Prohibited Storage of Flammable and Combustible Liquids.
29. Prohibited Bulk Storage of Liquefied Petroleum Gases.
30. Prohibited Storage of Flammable Cryogenic Fluids.
31. Transport Vehicles and Trailers Storing Hazardous Materials.
32. Joint Emergency and Fire Apparatus Access Roads.
33. Violations - General.
34. Continuing Violations.
35. Acts Including Causing, Aiding and Abetting.

36. Enforcement – Purpose and Remedies.

37. Enforcement Remedies and Penalties are Cumulative and Discretionary; Not Exclusive.

38. Criminal Actions.

39. Authority to Investigate, Detain, Issue Criminal Citations and Arrest.

40. Civil Actions.

41. Administrative Citations and Penalties - General.

42. Administrative Citations and Penalties – Dangerous Fireworks and Unlawful Use of Safe & Sane Fireworks.

43. Administrative Citations and Penalties – Egregious Violations.

44. Administrative Citations and Penalties – False and Negligent Fire Alarm Program.

45. Appeal of Administrative Citations.

46. Recording of a Notice of Pendency.

47. Filing Notice of Action.

48. Public Nuisance Abatement of Fire Hazards.

49. Board of Appeals – Code Application and Interpretations.

50. Cost Recovery.

51. Treble Damages.

1. Findings and Adoption of the California Fire Code and California Residential Code.

(a) FINDINGS. The Board of Directors of the San Bernardino County Fire Protection District hereby finds as follows:

(1) That the California Fire Code, 2013 Edition, and 2012 International Fire Code, the California Residential Code, 2013 Edition, and the 2012 International Residential Code, are nationally recognized compilations of proposed rules, regulations, and standards of the International Code Council, Inc.

(2) That said California Fire Code, the International Fire Code and the

California Residential Code have been printed and published as a code in book form within the meaning of Section 50022.2 et seq. of the California Government Code.

(3) That the sections and subsections of said California Fire Code, the International Fire Code, and the California Residential Code may be referred to by the number used in said published compilation preceded by the words "California Fire Code Section," "California Residential Code," "Fire Code Section," or "Subsection" and may also be referred to by additional reference to the ordinances of the San Bernardino County Fire Protection District and sections therein pertaining to said California Fire Code, International Fire Code, and California Residential Code.

(4) That California Health and Safety Code Section 13869 et seq. provides, in pertinent part, that a District may make such changes or modifications to the provisions published in the California Building Standards Code and other regulations adopted pursuant to Section 17922 as it determines are reasonably necessary because of local climatic, geological and topographical conditions.

(5) That the additional requirements and standards established herein are needed to properly protect the health, safety, and welfare of the existing and future residents and workers of the San Bernardino County Fire Protection District. Said requirements and standards are reasonably necessary because of local climatic, geological, and topographical conditions described herein. This finding is based upon the express findings and determinations on the proposed amendments on file with the Building Standards Commission.

(6) Local Climatic Conditions.

(A) The District is subject to extremely strong winds, commonly known as "Santa Ana Winds" which can reach speeds in excess of 90 miles per hour. Extensive damage frequently accompanies these winds, such as blowing sand and debris, downed power lines, fallen trees, overturned vehicles and structural damage to buildings. These conditions result in increased demand for fire services, blocked or delayed emergency vehicle access and impaired water supplies and building

emergency systems.

(B) During the summer months, the Santa Ana Winds produce periods of extremely low humidity, thereby reducing the fuel moisture and increasing the possibility and severity of fire from dry vegetation and other common combustibles.

(C) During the summer months, much of the District experiences prolonged periods of temperatures in excess of 100°F. When coupled with sustained severe Santa Ana Winds, an increase in the threat from rapidly moving wildfires exists.

(D) During the winter months, heavy rains routinely cause damage to roadways rendering them completely impassible, or with limited access, sometimes for extended periods.

(E) During winter months, heavy snow and ice conditions exist in the mountain areas resulting in increased demand for fire services and limiting or delaying emergency vehicle access. In some cases, emergency vehicle access roads are completely impassible, or have limited access, sometimes for extended periods.

(7) Local Geological Conditions.

(A) The District is subject to moderately strong to severe shaking and surface ruptures resulting from numerous known earthquake faults located throughout the District. These local earthquake faults have the potential to cause severe personal and property damage, utility interruptions, fire hazards and hazardous materials releases. Additionally, significant roadway, bridge structure, water supply and communications systems are subject to failure, thereby causing a detriment to emergency services response.

(B) Unstable slopes in several areas throughout the District have experienced soil movement as a result of heavy or soaking rains, resulting in damage to roadways, structures and utilities.

(C) Some desert areas of the District have limited aquifers, exceptionally deep aquifers or aquifers providing only brackish or contaminated water supplies. This limits, or in some cases eliminates, water supplies available for

firefighting purposes.

(D) The District has many areas with rich deposits of minerals resulting in the presence of many subsurface and strip mining operations. These operations pose special problems due to confined access and large quantities of fuels and explosive materials.

(8) Local Topographical Conditions.

(A) The District encompasses an exceptionally large geographical area with limited access routes connecting valley, mountain and desert areas. This distance, combined with these limited access routes, results in delays in the reallocation of resources to emergency scenes.

(B) The topography of the District is exceptionally diverse, ranging from relatively flat desert and valley areas, to foothill areas, canyon areas and steep mountainous areas. This results in some areas that are inaccessible to radio communications, which hampers emergency response capabilities.

(C) The large geographical area and diverse topography of the District results in numerous water purveyors and water pressure zones throughout the response areas. This results in many areas having limited, unreliable or unavailable water supplies available for firefighting purposes.

(D) The District is traversed by several State Freeways and Interstate Highways, which provide for limited under or over crossing access points for emergency vehicles to cross to adjacent areas. These highways also restrict the ability of the local water supply grids to provide water from multiple points to all areas and necessitates the use of dead-end water mains in many areas adjacent to these highways.

(E) The District is traversed by two major active railroad main rail systems. These rail systems are used for both commuter and large freight trains, including the transportation of large quantities of hazardous materials. These rails provide for limited under or over crossing access points for emergency vehicles to cross

to adjacent areas. Emergency vehicles experience frequent delays at grade crossings until passenger and/or lengthy freight trains clear the grade crossings.

(F) Due to the size and topography of the District, it is traversed by several high voltage electrical transmission lines which cross over inaccessible desert and foothill brush-covered areas, as well as heavily forested steep mountain areas. High winds have caused damage to these lines, resulting in vegetation fires. Access to many of these areas is unavailable to vehicles, making response to these fires unusually difficult.

(G) Several large, high-pressure natural gas transmission lines traverse the District to transport natural gas at pressures exceeding 500 p.s.i. These lines pass through, under or over steep terrain and wildfire-prone areas and are also subject to damage due to flooding or seismic events.

(H) Several large petroleum product pipelines cross the District to transport large quantities of gasoline, diesel fuel and jet fuels under extremely high pressures. While generally underground, these pipelines pass through, under or over steep terrain and wildfire-prone areas and overhead at several overpasses located over thoroughfares and waterways. Damage to these pipelines has been experienced during rail accidents and flooding conditions. Additionally, these pipelines and their pumping and valve stations are subject to damage from seismic events.

(9) That the local climatic, geological and topographical conditions found herein together present increased hazard potentials that create a reasonable necessity to facilitate the ability of the Fire Code Official to establish increased administrative penalties in order to prevent the use of dangerous fireworks and the unlawful use of safe and sane fireworks, as well as to prevent and discourage egregious and other fire safety violations where public safety is at higher risk.

(b) ADOPTION OF THE CALIFORNIA FIRE CODE. The Board of Directors of the San Bernardino County Fire Protection District hereby adopts the 2013 edition of the California Fire Code (CFC), also known as Part 9 of Title 24 of the California Code

of Regulations (incorporating the 2012 International Fire Code), and Appendices as compiled and published by the International Code Council.

(c) ADOPTION OF THE CALIFORNIA RESIDENTIAL CODE. The Board of Directors of the San Bernardino County Fire Protection District hereby adopts the 2013 edition of the California Residential Code (CRC), also known as Part 2.5 of Title 24 of the California Code of Regulations (incorporating the 2012 International Residential Code), as compiled and published by the International Code Council.

(d) ADOPTION OF THE INTERNATIONAL FIRE CODE. The Board of Directors of the San Bernardino County Fire Protection District hereby adopts Chapters 8, 11, 25 and 26 in their entirety, as well as sections referenced below, of the 2012 edition of the International Fire Code (hereafter also to be known as the IFC), as compiled and published by the International Code Council, and amended herein.

(e) ADOPTION OF THE SAN BERNARDINO COUNTY FIRE DEPARTMENT FIRE PREVENTION STANDARDS. The Board of Directors of the San Bernardino County Fire Protection District hereby adopts the San Bernardino County Fire Protection District Fire Prevention Standards, current edition, as approved by the Fire Chief/Fire Warden of the San Bernardino County Fire Department, for informational purposes in clarifying and interpreting provisions of the California Fire Code, its amendments, and referenced Standards.

(f) The provisions of the CFC, IFC, subsequent amendments, California Fire Code Appendices and the San Bernardino County Fire Department Fire Prevention Standards shall be collectively known as the 2014 San Bernardino County Fire Protection District Fire Code (County Fire Code) and shall be applicable in all areas of San Bernardino County within the San Bernardino County Fire Protection District, any political subdivision or district that contracts with the San Bernardino County Fire Protection District for fire protection and prevention services, and in those other cities, towns and districts that ratify this Ordinance.

2. **Amendments to the California Fire Code.** The 2013 California Fire Code, also

known as Part 9 of Title 24 of the California Code of Regulations which is adopted in section (b), is hereby amended as follows:

(a) Chapter 1 is amended as follows:

(1) Section 104.10 is added to the San Bernardino County Fire Protection District Fire Code and amended, to read:

104.10 Fire Investigations. The Fire Code Official shall investigate the cause, origin and circumstances of any fire, explosion or other hazardous conditions. Information that could be related to trade secrets or processes shall not be made part of the public record, except as directed by a court of law.

(2) Section 105.3.7 is added to the San Bernardino County Fire Protection District Fire Code and amended, to read:

105.3.7 Information on the permit. The Fire Code Official shall issue all permits required by this code on an approved form furnished for that purpose. The permit shall contain the name of the permittee, a general description of the operation or occupancy, its location, the conditions of the permit, the period of validity or expiration date and any other information required by the Fire Code Official. Issued permits shall bear the signature of the Fire Code Official or other approved legal authorization.

(3) Section 105.4.6 is added to the San Bernardino County Fire Protection District Fire Code and amended, to read:

105.4.6 Retention of Construction Permit Documents. One set of construction documents shall be retained by the Fire Code Official for a period of not less than 180 days from date of completion of the permitted work, or as required by state or local laws. One set of approved construction permit documents shall be returned to the applicant. Documents, including issued permits, conditions, applicable job cards and approved plans, shall be kept on the site of the permitted activity, operation, building, work or premises at all times during which the activity, operation or work authorized thereby is in progress and shall be readily available for inspection.

(4) Section 105.6.1.3 is added to the San Bernardino County Fire Protection District Fire Code and amended, to read:

105.6.2.1 Automobile Wrecking Yards. An operational permit is required to operate an automobile wrecking yard in accordance with section 304.4 of this code.

(5) Section 105.6.3.1 is added to the San Bernardino County Fire Protection District Fire Code and amended, to read:

105.6.3.1 Battery Systems. An operational permit is required for a stationary storage battery system having an electrolyte capacity of more than 50 gallons as regulated by Chapter 6 of the California Fire Code.

(6) Section 105.6.4 is added to the San Bernardino County Fire Protection District Fire Code and amended, to read:

105.6.4 Carnivals, Fairs, Block Parties and other Outdoor Assemblage. An operational permit is required to conduct a carnival, fair, block party, race, concert, parade or other similar outdoor assemblage whether, public or private, when,

(A) The event will have an anticipated attendance of 200 or more persons per day, or

(B) In the opinion of the Fire Code Official, a permit and specific conditions are required due to the nature or location of the activity.

(7) Section 105.6.9 is added to the San Bernardino County Fire Protection District Fire Code.

(8) Section 105.6.12 is added to the San Bernardino County Fire Protection District Fire Code and amended, to read:

105.6.12 Dry Cleaning Plants. An operational permit is required to engage in the business of dry cleaning or to change to a more hazardous cleaning solvent used in existing dry cleaning equipment.

EXCEPTION: Dry cleaning plants using only Class IV solvents.

(9) Section 105.6.14 is added to the San Bernardino County Fire Protection District Fire Code and amended, to read:

105.6.14 Explosives. An operational permit is required for the manufacture, storage, handling, sale, use or public display of any quantity of explosives, or explosive materials.

EXCEPTIONS

(A) small arms ammunition of .75 caliber or less

(B) cartridges for propellant-actuated power devices

(C) cartridges for industrial guns

(D) 20 pounds or less of smokeless powder

(E) 5 pounds or less of black sporting powder providing such smokeless or black sporting powder is for the hand loading of small arms or small arms ammunition of .75 caliber or less and that it is for personal use and not for resale.

(10) Section 105.6.15.1 is added to the San Bernardino County Fire Protection District Fire Code and amended, to read:

105.6.15.1 Fireworks or Pyrotechnics Display. An operational permit is required to conduct a fireworks or pyrotechnics display before a public audience in accordance with Chapter 56 and California Code of Regulations, Title 19.

(11) Section 105.6.15.2 is added to the San Bernardino County Fire Protection District Fire Code and amended, to read:

105.6.15.2 Fixed Hood and Duct Extinguishing Systems. An operational permit is required to utilize commercial cooking appliances, as defined in Section 602, with a Type I hood and an automatic fire extinguishing system as required by section 904.11.

(12) Sections 105.6.16 105.6.17, 105.6.18, and 105.6.19 are added to the San Bernardino County Fire Protection District Fire Code.

(13) Section 105.6.27 of the California Fire Code is adopted into the San Bernardino County Fire Protection District Fire Code and amended, to read:

105.6.27 Liquefied Petroleum Gases. An operational permit is required for the storage or use of Liquefied Petroleum Gasses.

Exception:

(A) A permit is not required for two or less 20-pound (nominal 5-gallon) containers.

(B) A permit is not required for individual containers with a 500-gallon (1893 L) water capacity or less serving Group R-3 occupancies as the primary means of fuel for heating or cooking.

(14) Sections 105.6.28 and 105.6.29 are added to the San Bernardino County Fire Protection District Fire Code.

(15) Section 105.6.30 is added to the San Bernardino County Fire Protection District Fire Code and amended, to read:

105.6.30 Open Fires. An operational permit is required for the kindling or maintaining of an open fire on any public street, alley, road, or other public or private ground pursuant to Section 21.

(16) Section 105.6.31 is added to the San Bernardino County Fire Protection District Fire Code and amended, to read:

105.6.31 Open Flames and Torches. An operational permit is required to use a torch or open-flame device in a wildfire risk area.

(17) Section 105.6.32 is added to the San Bernardino County Fire Protection District Fire Code and amended, to read:

105.6.32. Open Flames In Assemblies and Indoor Uses. An operational permit is required to use open flames for entertainment or decorative purposes in connection with indoor or outdoor assemblies, dining or drinking establishments and other indoor commercial uses.

EXCEPTION: Candles and small-open flame decorative devices in accordance with Section 308.

(18) Section 105.6.33 is added to the San Bernardino County Fire

Protection District Fire Code.

(19) Section 105.6.33.1 is added to the San Bernardino County Fire Protection District Fire Code and amended, to read:

105.6.33.1 Pallet Yards. An operational permit is required to store, manufacture, refurbish or otherwise handle combustible pallets in excess of 200 pallets.

(20) Section 105.6.34 is added to the San Bernardino County Fire Protection District Fire Code.

(21) Sections 105.6.37 through 105.6.39 are added to the San Bernardino County Fire Protection District Fire Code.

(22) Section 105.6.39.1 is added to the San Bernardino County Fire Protection District Fire Code and amended, to read:

105.6.39.1 Rockets. An operational permit is required to sell or launch model rocket motors, experimental unlimited rocket motors and experimental/high powered rocket motors. Such sales and launching shall be in accordance with Section 22 of the California Fire Code.

(23) Section 105.6.40 is added to the San Bernardino County Fire Protection District Fire Code.

(24) Section 105.6.40.1 is added to the San Bernardino County Fire Protection District Fire Code and amended, to read:

105.6.40.1 Seasonal Sales Lots. An operational permit is required to operate an outdoor display and sales area of seasonal items including, but not limited to, fireworks, pumpkins or Christmas trees.

(25) Sections 105.6.41 and 105.6.42 are added to the San Bernardino County Fire Protection District Fire Code.

(26) Sections 105.6.44 and 105.6.45 are added to the San Bernardino County Fire Protection District Fire Code.

(27) Section 105.6.46 is added to the San Bernardino County Fire Protection District Fire Code and amended, to read:

105.6.46 Wood, Manure and Organic Product Storage. An operational permit is required to store or process wood chips, hogged material, lumber, plywood, manure, compost or other combustible organic products in excess of 200 cubic feet (6 m^3).

(28) Section 105.6.47 is added to the San Bernardino County Fire Protection District Fire Code and amended, to read:

105.6.47 Additional Permits. In addition to the permits required by Section 105.6, the following permits shall be obtained from the Fire Code Official prior to engaging in the following activities, operations, practices, or functions:

(A) Production facilities. To change use or occupancy, or allow the attendance of a live audience, or for wrap up parties.

(B) Motion picture and still photography production. To use any facility or location for the purpose of documentary, educational, or commercial motion picture, television, or still photography production of any type. A permit is required regardless if pyrotechnic special effects, open flame, use of flammable or combustible liquids and gases, welding, stunts involving vehicles or aircraft, or the parking of motor vehicles will occur or not.

(C) Live audiences. To install seating arrangements for live audiences in approved production facilities, production studios, and sound stages. See Chapter 48 of the California Fire Code.

(29) Section 105.7.4.1 is added to the San Bernardino County Fire Protection District Fire Code and amended, to read:

105.7.4.1 Dust Collection Systems. A construction permit is required for the installation or modification of Dust Collection System required pursuant to Chapter 22 and the standards listed in Table 2204.1 of the California Fire Code.

(30) Section 105.7.8.1 is added to the San Bernardino County Fire Protection District Fire Code and amended, to read:

105.7.8.1 High-Piled Storage. A construction permit is required for

the installation or modification of a high-piled storage area in excess of 500 square feet.

(31) Section 105.7.10.1 is added to the San Bernardino County Fire Protection District Fire Code and amended, to read:

105.7.10.1 Marinas. A construction permit is required to construct a marina with facilities for mooring or servicing of 5 or more vessels, or with a marine motor fuel-dispensing facility as regulated by Chapter 36 of the California Fire Code.

(32) Section 105.7.13 is added to the San Bernardino County Fire Protection District Fire Code and amended, to read:

105.7.13 Solar photovoltaic power systems. A construction permit is required to install or modify solar photovoltaic power systems.

Exception: A permit is not required for a one- or two-family dwelling.

(33) Section 105.7.11.1 is added to the San Bernardino County Fire Protection District Fire Code and amended, to read:

105.7.11.1 Refrigeration Systems. A construction permit is required to install or modify a mechanical refrigeration unit or system regulated by Chapter 6 of the California Fire Code.

(34) Section 105.7.11.2 is added to the San Bernardino County Fire Protection District Fire Code and amended, to read:

105.7.11.2 Smoke Control Systems. A construction permit is required to install or modify a Smoke Control System required by the San Bernardino County Fire Protection District Fire Code or California Building Code.

(35) Section 105.7.11.3 is added to the San Bernardino County Fire Protection District Fire Code and amended, to read:

105.7.11.3 Solar Power Generating Stations. A construction permit is required to construct or modify a solar power generation station or system.

(36) Section 105.7.15 is added to the San Bernardino County Fire Protection District Fire Code and amended, to read:

105.7.15 Standpipe Systems. A construction permit is required for the installation, modification or removal from service of a standpipe system. Maintenance performed in accordance with this Code is not considered a modification and does not require a permit.

(37) Section 105.7.16 is added to the San Bernardino County Fire Protection District Fire Code and amended, to read:

105.7.16 Temporary membrane structures and tents. A construction permit is required to erect an air–supported temporary membrane structure or tent having an area in excess of 400 square feet (37 m^2).

Exceptions:

(A) Tents used exclusively for recreational camping purpose.

(B) Funeral tents and curtains, or extensions attached thereto, when used for funeral services

(C) Tents and awnings open on all sides, which comply with all of the following:

(I) Individual tents shall have a maximum size of 700 square feet (65 m^2).

(II) The aggregate area of multiple tents placed side by side without a fire break clearance of not less than 12 feet (3658 mm) shall not be greater than 700 square feet (65 m^2) total.

(III) A minimum fire break clearance of 12 feet (3658 mm) to structures and other tents shall be maintained.

(b) Section 202 is amended, by adding or amending the following definitions:

ALL WEATHER DRIVING SURFACE. Any surface, as determined by a qualified engineer licensed by the State of California, to adequately support the imposed load of a fire apparatus and meets the intent of this code.

APPROVED. As defined in the San Bernardino County Fire Department Fire Prevention Standards and Interpretations or as otherwise deemed acceptable by the

Fire Code Official.

BARBECUE GRILL. (Also known as a barbeque or BBQ). A portable or fixed device, constructed of steel, concrete, clay, or other non-combustible material, for the primary purpose of cooking food over a liquefied petroleum-, natural gas-, wood- or charcoal-fueled fire. A barbecue may also include an outdoor bread-baking or pizza oven.

BARBECUE PIT. A trench or depression in the ground in which wood or other clean solid fuel is burned to produce a bed of hot coals for the sole purpose of cooking. A barbecue pit having a fuel area greater than 3 feet in width or 2 feet in height shall be considered a bonfire.

BONFIRE. An outdoor open fire burning clean materials other than rubbish, where the fuel being burned is not contained in an incinerator, outdoor, fireplace, portable outdoor fireplace or barbecue grill, has a total fuel area greater than 3 feet in width, length or diameter or 2 feet in height, and is used for pleasure, religious, ceremonial, cooking, warmth or other similar purposes.

DEPARTMENT. The San Bernardino County Fire Protection District.

DISTRICT. The San Bernardino County Fire Protection District.

DRIVEWAY. A privately owned, vehicular access road having a minimum unobstructed width of 12 feet (3658 mm) that serves no more than two Group R, Division 3 or Group U occupancies.

FIRE CHIEF/FIRE WARDEN. The chief officer of the San Bernardino County Fire Protection District, or a duly authorized representative.

FIRE CODE OFFICIAL. The Fire Chief/Fire Warden of the San Bernardino County Fire Protection District or a duly authorized representative charged with the administration and enforcement of this code.

OPEN BURNING PROJECT. The burning of waste vegetative materials, tree trimmings, agricultural burning, burning of Russian Thistle (tumbleweeds) and other similar burning not otherwise classified as an Open Outdoor Fire, bonfire or recreational

fire pursuant to the Mojave, and South Coast Air Quality Management Districts' Rule 444.

OPEN FIRE. Any outdoor fire including a Barbecue Pit, Bonfire, Open Burning Project, Portable Outdoor Fireplace, Recreational Fire, Residential Burning and burning of items or structures for the purposes of destruction of contraband or for training by law enforcement or fire department personnel.

PERSON. Individuals, businesses, general partnerships, limited partnerships, joint ventures, corporations, trust, concern, organization, state and local government entities, heirs, executors, administrators, receivers, or assigns, agents of the aforesaid, and every other legal entity or association having legal obligations subject to the provisions of this code.

PORTABLE OUTDOOR FIREPLACE. A portable, outdoor, solid-fuel burning fireplace constructed of steel, concrete, clay or other non-combustible materials and specifically designed for the containment of fire. A portable outdoor fireplace may have an open design or may have a small hearth opening with a short chimney or opening in the top. A portable outdoor fireplace having a fuel area greater than 3 feet in width or 2 feet in height shall be considered a bonfire.

RECREATIONAL FIRE. An outdoor open fire burning clean materials other than rubbish where the fuel being burned is not contained in an incinerator, outdoor fireplace, portable outdoor fireplace, barbecue grill or barbecue pit, and has a total fuel area equal to or less than 3 feet in width, length or diameter and 2 feet in height for pleasure, religious, ceremonial, cooking, warmth or other, similar purposes. Recreational fires also include any campfire or fire ring.

RESIDENTIAL BURNING. The burning of trash, waste materials, tree and yard trimmings or similar for disposal. For the purposes of this code, Residential Burning shall also include the burning of similar items at commercial properties and on vacant properties.

SELF-CONTAINED RESIDENTIAL AUTOMATIC SPRINKLER SYSTEM. An

approved fire sprinkler system, that conforms to Section 903.3.1.1. 903.3.1.2, or 903.3.1.3 of this code, NFPA standards 13, 13 R, or 13 D, or California Residential Code Section R313 and San Bernardino County Fire Department Fire Prevention Standards and Interpretations, and is supplied by a water source independent from a municipal water distribution system. If the system is mechanically assisted by booster pumps, it shall be independent from the dwelling's power supply.

SKY LANTERNS. Also known as Kongming Lantern, Chinese Lantern, Wish Lantern or similar. A small hot air balloon used for entertainment, lighting or ceremonial purposes, made of paper or similar lightweight material, with an opening at the bottom where a small fire is suspended. Devices that are anchored to the ground or released into the air without manual control fall under this definition.

WILDFIRE RISK AREA. Any area located within the Fire Safety Overlay areas identified in the San Bernardino County Development Code, and any land otherwise designated by the San Bernardino Fire Protection District, the County of San Bernardino, and any city or town as a Wildland Urban Interface, Very High Fire Hazard Severity Zone, High Fire Hazard Area, No Fireworks Safety Zone or any other land that is covered with grass, grain, brush or forest, whether privately or publicly owned, which is so situated or is of such inaccessible location that a fire originating upon it would present an abnormally difficult job of suppression or would result in great or unusual damage through fire or any other areas so designated by the Fire Code Official.

(c) Chapter 3 is amended as follows:

(1) Section 303 is added to the San Bernardino County Fire Protection District Fire Code.

(2) Section 304.4 is added to the San Bernardino County Fire Protection District Fire Code and amended, to read:

304.4 Automobile wrecking yards. Automobile wrecking yards and associated combustible materials storage shall be in accordance with San Bernardino County Fire Department Fire Prevention Standards. Automobile wrecking yards shall

require an operational permit in accordance with section 105 of this code.

(3) Sections 305 and 305.1 are added to the San Bernardino County Fire Protection District Fire Code and section 305.1 is amended, to read:

305.1 Clearance from Ignition Sources. Clearance between ignition sources such as luminaries, heaters, flame-producing devices and combustible materials shall be a minimum of 18 inches or as required by other applicable codes.

(4) Section 305.3 is added to the San Bernardino County Fire Protection District Fire Code and amended, to read:

305.3 Open-flame Warning Devices. Open-flame warning devices shall not be used along an excavation, road or any other place where the dislodgment of such device may permit the device to roll, fall or slide onto any area or land containing combustible materials.

Exception: This Section shall not apply to public safety personnel acting in the performance of their duties.

(5) Section 305.5 is added to the San Bernardino County Fire Protection District Fire Code and amended, to read:

305.5 Spark Arrestors. Each chimney used in conjunction with a fireplace, portable outdoor fireplace, or other heating appliance in which solid fuel is burned, shall be maintained with an approved spark arrester. The spark arrester shall have heat and corrosion resistance equivalent to 12-gauge wire, 19-gauge galvanized wire or 24-gauge stainless steel. Openings shall not permit the passage of spheres having a diameter larger than one-half inch (13 mm) maximum and shall not block the passage of spheres having a diameter of less than three-eighths inch (10 mm). The screen shall be mounted in or over all outside flue openings in a vertical and near vertical position, adequately supported to prevent movement and shall be visible from the ground. All spark arrestors shall be accessible and removable for cleaning.

(6) Section 308.1 is added to the San Bernardino County Fire Protection District Fire Code and amended, to read:

308.1 Open Flames - General. Notwithstanding any other provision of this code, open flames, fire and burning on all premises shall be in accordance with Sections 308.1.1 through 308.4.1 and 19 CCR Sections 325(a) and (b).

(7) Sections 308.1.2 and 308.1.3 are added to the San Bernardino County Fire Protection District Fire Code and section 308.1.3 is amended, to read:

308.1.3 Torches for Removing Paint or Weeds, for Melting Asphalt or for Welding or Cutting.

(A) Torches and other flame-producing devices shall not be used to remove paint from any structure or weeds from any premises.

(B) Notwithstanding any other provision of this code, persons utilizing a torch or other flame-producing device for melting asphalt or for welding or cutting shall provide a minimum of one portable fire extinguisher complying with Section 906 and with a minimum of a 4-A rating, or two portable fire extinguishers, each with a minimum of a 2-A rating, or a water hose connected to a working water source. The person conducting the burning or asphalt melting shall remain at the location for a minimum of one hour after the torch or flame-producing device is utilized.

(8) Section 308.1.4 is added to the San Bernardino County Fire Protection District Fire Code and amended, to read:

308.1.4 Open-Flame Cooking Devices. Charcoal burners and other open-flame cooking devices shall not be operated on combustible balconies or decks, or within 10 feet (3048 mm) of combustible construction.

Exceptions:

(A) One- and two-family dwellings where provisions are made to prevent the fire from spreading to any combustible materials.

(B) Where buildings, balconies and decks are protected by an automatic sprinkler system.

(C) LP-gas cooking devices having an LP-gas container with a water capacity not greater than 2 ½ pounds. Containers shall not be manifolded

together to increase capacity.

(D) Cooking devices heated solely using a catalytic heating element with no flame production.

For purposes of this section, the term "combustible" construction shall meet the definition contained in Section 202 of the California Building Code.

(9) Section 308.1.5 is added to the San Bernardino County Fire Protection District Fire Code and amended, to read:

308.1.5 Locations Near Combustibles. Notwithstanding Sections 305.1 and 308.3 et seq., open flames such as candles, lanterns, kerosene heaters, and gas-fired shall not be located on or near decorative materials or similar combustible materials.

(10) Section 308.1.9 is added to the San Bernardino County Fire Protection District Fire Code and amended, to read:

308.1.9 Sky Lanterns Prohibited. The release or failure to prevent the release of Sky Lanterns into the air without an effective means of control is prohibited within the jurisdiction of the San Bernardino County Fire Department.

EXCEPTION: Sky Lanterns used for scientific or research purposes when reasonable precautions are made to prevent loss of control or the ignition of surrounding combustibles. Persons releasing Sky Lanterns used for scientific or research purposes shall first submit a plan outlining the scientific or research purpose and shall obtain a permit and specific conditions from the Fire Code Official.

(11) Sections 309, 310, and 311.1 are added to the San Bernardino County Fire Protection District Fire Code and section 311.1 is amended, to read:

311.1 General. Temporarily unoccupied buildings, structures, premises, or portions thereof, including tenant spaces, shall be safeguarded and maintained in accordance with this Section, the California Building Code and the San Bernardino County Code.

(12) Section 313 of the California Fire Code is added to the San

Bernardino County Fire Protection District Fire Code.

(13) Sections 315.4 and 315.6 are added to the San Bernardino County Fire Protection District Fire Code and Section 315.6 is amended, to read:

315.6 Incidental outside storage of pallets. The incidental outside storage of 200 or fewer pallets shall comply with the provisions of Section 315.4 of this Code. Storage of more than 200 pallets at pallet manufacturing, storage or refurbishing yards shall comply with the San Bernardino County Fire Department Fire Prevention Standards.

(14) Section 315.7 is added to the San Bernardino County Fire Protection District Fire Code and amended, to read:

315.7 Outside storage of firewood. The outside storage of firewood shall comply with the provisions of Section 315 of the California Fire Code adopted pursuant to Section 1(b) of the San Bernardino County Fire Protection District Fire Code and San Bernardino County Fire Department Fire Prevention Standards.

(15) Section 315.8 is added to the San Bernardino County Fire Protection District Fire Code and amended, to read:

315.8 Storage of motor vehicles and trailers. Outside storage of automobiles, trucks, recreational vehicles, trailers and other similar vehicles on a temporary or permanent basis shall meet the requirements of the San Bernardino County Fire Department Fire Prevention Standards.

Exceptions:

(A) Parking of vehicles at wholesale or retail sales lots.

(B) Parking lots for public or private use where vehicles are parked or stored on the premises without being moved for a period not exceeding 30 days.

(d) Chapter 4 of the California Fire Code is adopted into the San Bernardino County Fire Protection District Fire Code.

(e) Chapter 5 of the California Fire Code is adopted into the San Bernardino

County Fire Protection District Fire Code and amended, as follows:

(1) Section 503.2 is added to the San Bernardino County Fire Protection District Fire Code and amended, to read:

503.2 Specifications. Fire apparatus access roads shall be installed and arranged in accordance with Sections 503.2.1 through 503.2.7. In addition, all fire apparatus access roadways shall meet San Bernardino Fire Department Fire Prevention Standards.

(2) Section 503.2.1 is added to the San Bernardino County Fire Protection District Fire Code and amended, to read:

503.2.1 Dimensions. Fire apparatus access roads shall have an unobstructed width of not less than 26 feet (7925 mm), except for approved security gates in accordance with Section 503.6, and an unobstructed vertical clearance of not less than 14 feet, 6 inches (4420 mm). Roadways that provide fire apparatus access to buildings having occupied floors that are greater than two stories above such adjacent roadways shall have an unobstructed width of 30 feet (9144 mm).

EXCEPTIONS:

(A) One-way access roads may have an unobstructed width of not less than 20 feet (6096 mm).

(B) Driveways of one- and two-family dwellings shall be a minimum of 12 feet (3658 mm) in width.

(C) Required access road dimensions may be modified when, due to location on property, topography, waterways, nonnegotiable grades or other similar conditions, the Fire Code Official determines that the conditions cannot be met.

(3) Section 503.2.2 is added to the San Bernardino County Fire Protection District Fire Code.

(4) Section 503.2.3 is added to the San Bernardino County Fire Protection District Fire Code and amended, to read:

503.2.3 Surface. Fire apparatus access roads shall be designed

and maintained to support the imposed loads of fire apparatus and shall be surfaced in order to provide an all-weather driving surface capable of supporting an imposed load of at least 75,000 pounds. Where road grades do not exceed eight percent (8%), and where serving only one- or two-family dwellings or accessory Group U occupancies, the Fire Code Official may approve roads constructed with approved native materials or gravel compacted to eighty-five percent (85%) compaction.

(5) Sections 503.2.4 - 503.2.6 are added to the San Bernardino County Fire Protection District Fire Code.

(6) Section 503.2.7 is added to the San Bernardino County Fire Protection District Fire Code and amended, to read:

503.2.7 Grade. The grade of a fire apparatus access road or driveway shall be a maximum of twelve percent (12%).

Exceptions:

(A) The grade of a fire apparatus access road or driveway may be increased to fourteen percent (14%) for a distance not to exceed 500 feet with the approval of the Fire Code Official based upon specific circumstances.

(B) The grade of a one- or two-family dwelling driveway may be increased to a maximum of sixteen percent (16%) for a distance not to exceed 500 feet in areas in which the Hillside Grading Standards pursuant to Chapter 83.08 of the San Bernardino County Development Code apply and with the approval of the Fire Code Official.

(C) Where more restrictive local city requirements apply.

(7) Section 503.2.8 is added to the San Bernardino County Fire Protection District Fire Code.

(8) Section 503.3 is added to the San Bernardino County Fire Protection District Fire Code.

(9) Section 503.4 is added to the San Bernardino County Fire Protection District Fire Code and amended, to read:

503.4 Obstruction of fire apparatus access roads. Fire apparatus access roads shall not be obstructed in any manner, including the parking of vehicles. The minimum widths and clearances established in Section 503.2.1 shall be maintained at all times. Any condition that serves as an impediment to fire access, or any vehicle or other obstruction to fire access may be removed at the orders of the Department or other governing agency in cooperation with the Department, with the expense of such removal to be paid by the owner of the roadway, or of said vehicle or obstruction.

(10) Sections 503.4.1, 503.5 – 503.5.2, 503.6 are added to the San Bernardino County Fire Protection District Fire Code.

(11) Section 504.4.1 is added to the San Bernardino County Fire Protection District Fire Code and amended, to read:

504.4.1 Foam Cornices. Buildings with cornices or other trim at the edge of a roof or parapet wall made of expanded foam plastic or other similar materials shall be installed in accordance with San Bernardino County Fire Department Fire Prevention Standards in order to allow a reliable surface on which a ladder can be used to access the roof.

(12) Section 505.1 is added to the San Bernardino County Fire Protection District Fire Code and amended, to read:

505.1 Address numbers. Newly constructed and existing buildings shall have approved address numbers, building numbers or approved building identification placed in a prominent position that is plainly legible and visible from the street or road fronting the property. If there is more than one building on a lot and only one number is assigned, the number shall be posted on the principal building or the building nearest the street. These numbers shall contrast with the background to which they are attached. Address numbers shall be Arabic numerals or alphabet letters. Such address numbers shall be electrically illuminated by an internal or external source during the hours of darkness.

(13) Sections 505.1.1 – 505.1.6 are added to the San Bernardino

County Fire Protection District Fire Code and amended, to read:

505.1.1 Single family residential dwelling units. All new residential dwelling units, other than multifamily dwelling units, shall, in addition to the requirements of Section 505.1 of the San Bernardino County Fire Protection District Fire Code, be posted with address numbers that are:

A. Internally electrically illuminated so as to be visible during the hours of darkness, or

B. Where building setbacks exceed 100 feet (30.5 m) from the street or would otherwise be obstructed, numbers shall be displayed on an independent structure, such as a post, at the property entrance. These additional numbers are not required to be illuminated, but shall be reflective and meet the requirements of this Section.

505.1.2 Multifamily, commercial, and industrial buildings less than 100,000 square feet. All new multifamily, commercial, industrial, and other non-residential use buildings less than 100,000 square feet (9290 m^2) in area shall, in addition to the requirements of Section 505.1 of the San Bernardino County Fire Protection District Fire Code, be posted with address numbers that are:

A. Not less than eight inches (204 mm) in height, with a minimum stroke width of 1 inch (25.5 mm); and

B. Where building setbacks exceed 200 feet (61 m) from the street, or the numbers on the building would not be visible or would otherwise be obstructed, additional numbers shall be displayed on an independent structure, at the property entrance. These additional numbers shall not be less than six inches (153 mm) in height, with a minimum stroke width of 0.75 inches (19 mm) and shall otherwise meet the requirements of this Section.

505.1.3 Multifamily, commercial, and industrial buildings 100,000 square feet or larger. All new multifamily, commercial, industrial, and other non-residential use buildings 100,000 square feet (9290 m^2) or larger in area shall, in

addition to the requirements of Section 505 and all other local requirements, be posted with address numbers that are:

A. Not less than twelve inches (306 mm) in height, with a minimum stroke width of 1.5 inch (38 mm); and

B. Where building setbacks exceed 200 feet (61 m) from the street, or the numbers on the building would not be visible or would otherwise be obstructed, additional numbers shall be displayed on an independent structure, at the property entrance. These additional numbers shall not be less than six inches (153 mm) in height, with a minimum stroke width of 0.75 inches (19 mm) and shall otherwise meet the requirements of this Section.

505.1.4 Illuminated directory. All new multiple dwelling unit complexes of 20 or more units shall be provided with an illuminated directory at each entry, clearly visible and within the setback area. The directory shall at a minimum consist of a diagrammatic representation of the complex which shows the location of the viewer and the unit designations within the complex.

505.1.5 Individual units. All individual residential units or tenant lease spaces in a new multifamily, commercial, or industrial building shall be posted with identification numbers, not less than 3 inches (76 mm) in height, that are electrically illuminated and easily visible to approaching vehicular and/or pedestrian traffic.

505.1.6 Rear addressing. Any business which affords vehicular access to the rear through any driveway, alleyway, or parking lot shall also display the same numbers on the rear of the building.

(14) Section 507.1 is added to the San Bernardino County Fire Protection District Fire Code and amended, to read:

507.1 Required water supply. An approved water supply capable of supplying the required fire flow for fire protection shall be provided to premises upon which facilities, buildings or portions of buildings are hereafter constructed or moved

into or within the jurisdiction. In areas without a water purveyor capable of supplying the required water supply, National Fire Protection Association standard 1142 (current edition) shall be used to establish on-site water storage capacities, when allowed by the Fire Code Official.

EXCEPTION:

(A) For single one- and two-family dwellings and attached garages, and accessory Group U occupancies, not part of a parcel map, tentative tract or other similar planned development, where an adequate water supply cannot be provided by a water purveyor or well, the following alternatives may, when approved by the Fire Code Official, be considered in lieu of an adequate water supply:

(I) The structure shall be located a minimum 50 foot setback from all property lines, or

(II) Provide other approved alternate means and methods as approved by the Fire Code Official.

(15) Section 507.2.3 is added to the San Bernardino County Fire Protection District Fire Code and amended, to read:

507.2.3 Temporary Water Supply. When approved by the Fire Code Official, a temporary water supply may be provided for buildings under construction, prior to such buildings being occupied. Temporary water supplies shall be in accordance with San Bernardino County Fire Department Fire Prevention Standards.

(16) Section 507.3 is added to the San Bernardino County Fire Protection District Fire Code and amended, to read:

507.3 Fire Flow. Fire flow requirements for buildings or portions of buildings and facilities shall be determined by an approved method below or Appendix B.

(A) **EXCEPTION:** For single one- and two-family dwellings and attached garages and accessory Group U occupancies, not part of a parcel map, tentative tract or other similar planned development, where an adequate fire flow cannot

be provided by a water purveyor or well, or onsite water storage tanks, the following alternatives may, when approved by the Fire Code Official, be considered as adequate fire flow:

(I) The structure shall be located so as to provide a minimum 50 foot setback from all property lines, or

(II) Provide other approved alternate means and methods as approved by the Fire Code Official.

(17) Section 507.5.1 is added to the San Bernardino County Fire Protection District Fire Code and amended, to read:

507.5.1 Where required. Where a portion of the facility or building hereafter constructed or moved into or within the jurisdiction is more than 300 feet (91.5 m) from a hydrant on a fire apparatus access road, as measured by an approved route around the exterior of the facility or building, on-site fire hydrants and mains shall be provided where required by the Fire Code Official.

Exception:

(A) For Group R-3 and attached Group U occupancies, equipped throughout with an approved automatic sprinkler system installed in accordance with Section 903.3.1.1, 903.3.1.2 or 903.3.1.3, the distance requirement shall not be more than 600 feet (183 m).

(B) Single one- and two-family dwellings and attached garages, not part of a parcel map, tentative tract or other similar planned development, equipped with an approved automatic residential fire sprinkler system or an approved self-contained residential automatic sprinkler system, shall not be required to provide an on-site hydrant when allowed by the Fire Code Official.

(18) Section 507.5.1.2 is added to the San Bernardino County Fire Protection District Fire Code and amended, to read:

507.5.1.2 Redundant water supplies. New on-site fire hydrant water systems that serve buildings greater than 100,000 square feet (9,290 m^2) in floor

area shall have two separate remote connections to the public water system designed and constructed in accordance with NFPA and San Bernardino County Fire Department Fire Prevention Standards and approved by the Fire Code Official.

(19) Section 509.3 is added to the San Bernardino County Fire Protection District Fire Code and amended, to read:

509.3 Access to equipment in multi-unit buildings. When automatic fire sprinkler systems or fire alarm systems are installed in buildings constructed for multiple tenants and these systems protect multiple tenant spaces, the main controls and control appurtenances, such as risers, fire alarm control panels, and valves for such systems, shall be located in an attached or included room or an approved weather resistant enclosure with at least one exterior access door of not less than 3'-0" (918 mm) in width by 6'-8" (2040 mm) in height.

(20) Section 509.4 is added to the San Bernardino County Fire Protection District Fire Code and amended, to read:

509.4 Fire Control Room. A fire control room for fire department operations shall be provided in all newly constructed Group S-1 and S-2 distribution warehouses greater than 300,000 square feet (27,870 m^2) in floor area. The location and accessibility of the fire control room shall be approved by the Fire Code Official. The fire control room shall be separated from the remainder of the building by walls and ceilings not less than one-hour fire partitions and shall have at least one exterior access door of not less than 3'-0" (918 mm) in width by 6'-8" (2040 mm) in height. The room shall be a minimum of 96 square feet ($9m^2$) with a minimum dimension of 8 feet (2438 mm.) The room shall contain the following as a minimum:

(A) The fire alarm control unit and associated equipment, including an annunciator panel displaying status of sprinkler control valves and waterflow detectors.

(B) Main controls and indicators for mechanical smoke exhaust systems.

(C) A printed graphic exhibit(s) showing the building floor plan, automatic sprinkler systems, fire alarm systems, smoke exhaust systems, fire department access doors, and any other equipment as required by the Fire Code Official.

(D) Other firefighting equipment and system controls as required by the Fire Code Official.

(f) Chapter 6 of the California Fire Code is adopted into the San Bernardino County Fire Protection District Code and is amended, as follows:

(1) Section 603.1.4 of the San Bernardino County Fire Protection District Fire Code is amended, to read:

603.1.4 Fuel Oil. The grade of fuel oil used in a burner shall be that for which the burner is approved as stipulated by the burner manufacturer. Oil containing gasoline or other materials, and used or crankcase oil shall not be used.

(2) Section 608.1 of the San Bernardino County Fire Protection District Fire Code is amended, to read:

608.1 Scope. Stationary storage battery systems having an electrolyte capacity of more than 50 gallons (189 L) for flooded lead-acid, nickel cadmium (Ni-Cd), and valve-regulated lead-acid (VRLA), or 1,000 pounds (454 kg) for lithium-ion and lithium metal polymer, used for facility standby power, emergency power, uninterrupted power supplies, and powering industrial trucks and equipment shall comply with this Section and Table 608.1.

(g) The following sections of Chapter 9 are added or amended as follows:

(1) Section 901.4.2 is added to the San Bernardino County Fire Protection District Fire Code and amended, to read:

901.4.2 Non-required fire protection systems. Any fire protection not required by this code or the California Building Code shall be allowed to be furnished provided such installed system meets the requirements of this code, the California Building Code, and the San Bernardino County Fire Department Fire

Prevention Standards.

(2) Section 901.4.2.1 is added to the San Bernardino County Fire Protection District Fire Code and amended, to read:

901.4.2.1 Partially Protected Structures. Notwithstanding any other provisions of this code or specific exemptions, no building or structure shall be partially furnished with a new fire protection system.

Exceptions:

(A) Existing structures or buildings currently not protected when the only fire protection system being installed is part of Type I commercial cooking hood and duct system, other than an automatic sprinkler system, or any other system required by Table 903.2.11.6.

(3) Section 901.8.2 is added to the San Bernardino County Fire Protection District Fire Code and amended, to read:

901.8.2 Theft deterrents. The Fire Code Official is authorized to require installation methods, mechanisms, or other technology that will serve to deter theft or tampering with fire protection appliances.

(4) Section 903.2 is added to the San Bernardino County Fire Protection District Fire Code and amended, to read:

903.2 Where required. Approved automatic fire sprinkler systems in new building and structures shall be provided in the locations described in this section and Sections 903.2.1 through 903.2.19.

(A) Notwithstanding any other provision of Sections 903.2.1 through 903.2.19, excluding any specific exception, or any more restrictive provisions of any local ordinance of any political subdivision that contracts with the San Bernardino County Fire Protection District, an approved automatic fire sprinkler system shall be provided throughout all newly constructed buildings of any occupancy group, when the gross floor area is equal to or exceeds 5,000 square feet (465m^2), regardless of fire resistive separation walls.

Exception: Group U occupancies accessory to a one- or two-family dwelling that are not used for commercial or industrial purposes.

(B) In existing structures, other than Group R, Division 3 (one and two family dwellings and accessory Group U occupancies), not equipped with an automatic fire sprinkler system, the following requirements shall apply:

(I) For existing structures when an addition causes the structure to exceed 5,000 square feet (465m^2) in gross floor area and and/or such addition is equal to or greater than 50% of the square footage existing as of January 1, 2011, the entire structure shall be provided with an automatic sprinkler system.

(II) For existing buildings larger than 5,000 square feet (465m^2) in gross floor area, when a change of use occurs that, in the opinion of the Fire Code Official using the guidance of the California Building Code, increases the likelihood of, or increases the danger to occupants in a fire incident, the entire fire area shall be provided with an automatic sprinkler system.

(5) Section 910.4 is added to the San Bernardino County Fire Protection District Fire Code and amended, to read:

910.4 Mechanical smoke exhaust. Engineered mechanical smoke exhaust systems conforming to the requirements of Section 910.4 of this Code shall be provided in all newly constructed Group S-1 and S-2 distribution warehouses greater than 300,000 square feet (27,870 m^2) in floor area, and shall be an acceptable alternative to smoke and heat vents in all other occupancies.

(h) Chapter 28 is amended, as follows:

(i) Section 2810 is added to the San Bernardino County Fire Protection District Fire Code, to read:

Section 2810

Storage of Combustible Idle Pallets

2810.1 General. Incidental storage of more than 200 combustible idle pallets and any storage of pallets at pallet manufacturing, storage and refurbishing yards shall be in

accordance with the San Bernardino County Fire Department Fire Prevention Standards. An operational permit shall be obtained in accordance with Section 105.6.33.1.

(j) Appendix B is amended as follows:

B105.2 Buildings other than one and two family dwellings. The minimum fire flow and flow duration for buildings other than one- and two- family dwellings shall be as specified in table B105.1.

Exception. A reduction in required fire-flow of up to 50 percent, as approved, is allowed when the building is provided with an approved automatic sprinkler system installed in accordance with Section 903.3.1.1 or 903.3.1.2. A reduction in required fire flow of up to 75 percent is allowed for isolated buildings of Group U occupancy, agricultural uses, or other low hazard uses when approved by the Fire Code Official. The resulting fire flow shall not be less than 1,500 gallons per minute (5678 L/min) for the prescribed duration as specified in Table B105.1

(k) Appendix C is amended as follows:

C103.1 Fire hydrants available. The number of fire hydrants available to a complex or subdivision shall not be less than that determined by spacing requirements specified in Section C105.1 when applied to fire apparatus access roads and perimeter public streets from which fire operations could be conducted.

(l) Section C105.1 is amended, to read:

C105.1 Hydrant Spacing. The average spacing between fire hydrants shall not exceed that specified by the San Bernardino County Fire Department Fire Prevention Standards, specifically, 300 feet (91m) apart in industrial, commercial and multifamily development, and 600 feet (183m) apart in all single family development. Spacing of fire hydrants along public streets shall also be guided by other County or City public works standards.

Exception: The Fire Code Official is authorized to accept a deficiency of up to 10 percent where existing fire hydrants provide all or a portion of the required fire

hydrant service.

(m) Table C105.1 is deleted.

3. Amendments to the California Residential Code. The California Residential Code as adopted by the San Bernardino County Fire Protection District is amended as follows:

(a) Section R313.2 is amended, to read:

R313.2 One- and two-family dwellings automatic fire systems. An automatic residential fire sprinkler system shall be installed in one-and two-family dwellings, including new or used manufactured homes and in multi-unit manufactured housing with two dwelling units manufactured after January 1, 2011 where a fire sprinkler system would be normally be required in any residential unit that could be built on the same site.

EXCEPTIONS:

(1) An automatic residential fire sprinkler system shall not be required for additions or alterations to existing buildings that are not already provided with an automatic residential sprinkler system.

(2) Used manufactured homes moved into the jurisdiction that do not already have an automatic fire sprinkler system shall not be required to have a new automatic fire sprinkler system installed.

(b) Section R313.2.1 is amended, to read:

R313.2.1 Design and Installation. Automatic residential fire sprinkler systems shall be designed and installed in accordance with Sections R313.3 or NFPA 13D. Automatic residential fire sprinkler systems installed in new or used manufactured homes and in multi-unit manufactured housing with two dwelling units shall be designed and installed in accordance with California Code of Regulations, Title 25.

(c) Section R313.3.1.1 is amended, to read:

R313.3.1.1 Required Sprinkler Locations. Sprinklers shall be installed to protect all areas of a dwelling unit.

EXCEPTIONS:

(1) Attics, crawl spaces, built-up areas and normally unoccupied concealed spaces, less than 5 feet in height, that do not contain fuel-fired appliances do not require sprinklers. In those areas containing fuel-fired appliances, a sprinkler shall be installed above the appliance.

(2) Clothes closets, linen closets, and pantries not exceeding 24 square feet (2.2 m^2) in area, with the smallest dimension not greater than 3 feet (915 mm) and having wall and ceiling surfaces of gypsum board.

(3) Detached garages; carports with no habitable space above; open attached porches, balconies or stairs, and similar areas.

(4) Sprinklers in new or used manufactured homes and in multi-unit manufactured housing with two dwelling units shall be installed in accordance with California Code of Regulations, Title 25.

(d) Section R313.3.5.2 is amended, to read:

R313.3.5.2 Required capacity. The water supply shall have the capacity to provide the required design flow rate for sprinklers for a period of time as follows:

(1) 7 minutes for dwelling units one story in height and less than 2,000 square feet (186 m^2) in area. For the purposes of determining the area of the dwelling unit, the area of attached garages and attached open carports, porches, balconies and patios shall not be included.

(2) 10 minutes for dwelling units two or more stories in height or equal to or greater than 2,000 square feet (186 m^2) in area. For the purposes of determining the area of the dwelling unit, the area of attached garages and attached open carports, porches, balconies and patios shall not be included.

Where a well system, a water supply tank system, a pump, or a combination thereof, is used, the water supply shall serve both domestic and fire sprinkler systems. Any combination of well capacity and tank storage shall be permitted to meet the capacity requirement.

EXCEPTION: Where a residential fire sprinkler system is supplied by a stored water source with an automatically operated means of pressurizing the system other than an electric pump, the water supply may serve the sprinkler system only.

4. Referenced Codes and Standards.

The codes and standards referenced in this San Bernardino County Fire Protection District Code shall be those that are listed in Chapter 80 of the California Fire Code as adopted by this ordinance, and the San Bernardino County Fire Department Fire Prevention Standards. Such codes, standards and interpretations shall be considered part of the requirements of this San Bernardino County Fire Protection District Code to the prescribed extent of each such reference. Where differences occur between this Code and the referenced standards, the Fire Code Official shall determine which requirements meet the intent of this Code.

5. Conflicting Provisions.

Where there is a conflict between a general requirement and a specific requirement, the Fire Code Official shall determine which requirement meets the intent of this Code. Provisions of the California Code of Regulations that are included in this Code specifically or by reference shall prevail except where this Code contains a more restrictive requirement.

6. Validity and Severability.

This San Bernardino County Fire Protection District Code shall not be in conflict with state or federal law. If any section, subsection, sentence, clause or phrase of this Code or the application thereof is held invalid, such invalidity shall not affect other provisions or applications which can be given effect without the invalid provision or application, and to this end the provisions of this Code are severable.

7. No Liability or Warranty.

The County of San Bernardino, the San Bernardino County Fire Protection District, any political subdivision or district that contracts with the San Bernardino

County Fire Protection District, and their employees or agents shall not be held liable for any act or omission or act done in good faith reliance upon state law, or the ordinance, codes, standards, interpretations, policies or procedures of the San Bernardino County Fire Protection District. The County of San Bernardino, the San Bernardino County Fire Protection District, any political subdivision or district that contracts with the San Bernardino County Fire Protection District, and their employees or agents shall not be held liable for the negligence of, nor as the guarantor of proper performance by, any person or entity holding any license, permit, certificate, registration, privilege or other entitlement from the District.

8. Authority - General

The Fire Code Official shall implement, administer, and enforce the provisions of this San Bernardino County Fire Protection District Code and shall have the authority to render interpretations of the Code, and the standards of the National Fire Protection Association. The Fire Code Official shall also have the authority to adopt policies, procedures, rules and regulations in order to clarify the application of this Code. Such interpretations, policies, procedures, rules and regulations shall be in compliance with the intent of this Code. Violations of any interpretation, policy, procedure, rule or regulation shall be considered a violation of the provisions of this Code.

9. Authority at Fires or Other Emergencies.

(a) The Fire Chief/Fire Warden, Fire Code Official or any officer of the San Bernardino County Fire Protection District in charge at the scene of a fire or other emergency involving the protection of life or property shall have the authority to direct operations as necessary to extinguish or control any fire, perform any rescue operation, investigate the existence of suspected or reported fires, gas leaks, or other hazardous conditions or situations, or take any other action necessary in the reasonable performance of duty. In the exercise of such authority, the Fire Chief/Fire Warden, Fire Code Official or officer is authorized to prohibit any person, vehicle, vessel or thing from approaching the scene and is authorized to remove or cause to be removed, or keep

away from the scene any person, vehicle, vessel or thing which could impede or interfere with the operations of the fire department.

(b) The Fire Chief/Fire Warden, Fire Code Official or officer of the San Bernardino County Fire Protection District in charge at the scene of a fire or other emergency is authorized to place ropes, tape, flagging, barricades, guards or other obstructions across any street, alley, place, driveway or private property in the vicinity of such operation so as to prevent accidents or interference with the lawful operations of the fire department to manage and control the situation and to allow the safe operation of fire, rescue and investigation apparatus.

(c) The Fire Chief/Fire Warden, Fire Code Official or officer of the San Bernardino County Fire Protection District in charge at the scene of a fire or other emergency is authorized to disconnect or authorize disconnection of utility service to any building, structure, vehicle or system in order to safely execute emergency operations or to eliminate an immediate hazard.

10. Authority to Inspect, Issue Notices and Administrative Citations or Abate a Public Nuisance.

(a) Whenever it is necessary to make an inspection to enforce the provisions of this Code, or whenever the Fire Code Official has reasonable cause to believe that there exists in a building or premises any conditions or activity requiring a permit authorized by this Code, or reasonably believes that there are any violations of this Code which make a building, premises, condition or activity unsafe, dangerous or hazardous, the Fire Code Official and those personnel designated by the Fire Code Official are authorized to enter, at all reasonable times, upon any property, premises, enclosure, structure, vehicle or vessel within the unincorporated areas of the County of San Bernardino or within any political subdivision or district that contracts with the San Bernardino County Fire Protection District to determine whether the building, property, premises, enclosure, structure, vehicle, vessel, condition or activity is in compliance with this Code, or whether a violation of this Code has occurred or is occurring, and to make

any inspection as may be necessary in the performance of their enforcement duties, to issue a Notice of Correction, Notice of Violation or to issue a Stop Work Order or citation.

(b) The Fire Code Official and those persons designated by the Fire Code Official are authorized to take of photographs, samples, or other physical evidence, and make video and/or audio recordings. All such entries and inspections shall be done in a reasonable manner. If an owner, lawful occupant, or the respective agent, employee, or representative thereof, refuses permission to enter and/or to inspect, the District may seek an administrative inspection warrant pursuant to the procedures provided by California Code of Civil Procedure Sections 1822.50 through 1822.59, as may be amended from time to time, or the successor provisions thereto.

(c) The Fire Code Official and those persons designated by the Fire Code Official are authorized to investigate, detain, and issue criminal or administrative citations for any violation of this Code or of the provisions of any code or standard adopted and incorporated by reference by this Code.

(d) Any violation of this Code, the California Fire Code, the San Bernardino County Fire Department Fire Prevention Standards or of the provisions of any code adopted and incorporated by reference by this Code may be deemed a fire hazard by the Fire Code Official and acted upon pursuant to the public nuisance abatement provisions of Chapter 5 of Division 3 of Title 2 of the San Bernardino County Code beginning with Section 23.0503.

11. Closure of public and private lands. When it is determined by the Fire Code Official that conditions exist on public lands within a Wildfire Risk Area that present an immediate, exceptional, or continuing danger, the Fire Chief/Fire Warden is authorized to close the affected areas and prohibit the entry of the general public. Prior to closure of private property, notification of the closure shall be made to any concerned property owners and consent obtained. Upon closing and prohibiting entry to public lands, signs shall be posted at the entry points of the affected areas indicating that the area is closed

due to the existence of dangerous conditions and that entry is prohibited. Prior to closing and prohibiting entry to any State or Federally controlled lands, notification shall be made and consent obtained from the Director of Forestry and Fire Protection or U.S. Forest Service, as appropriate. Any public highway traversing such a closed area, shall, however, be excluded from the order of closure, and the closure to entry does not prohibit or curtail the entry or use of the lands by the owner of the lands or his agent, nor the entry by any federal, state or county officer upon the closed area in the performance of his official duties. All state and county law enforcement officers shall enforce the order of closure.

12. Interference Unlawful.

(a) It shall be unlawful for any person or entity to deny access to, interfere with, prevent, restrict, obstruct, or hinder employees or agents of the San Bernardino County Fire Protection District acting within the scope of their duty.

(b) It shall be unlawful for any person to render a system or device inoperative during an emergency unless by direction of the Fire Chief/Fire Warden, Fire Code Official or officer of the San Bernardino County Fire Protection District in charge at the scene of a fire or other emergency.

13. Official Records.

The Fire Code Official shall keep official records as required by Sections 104.6.1 through 104.6.4. Such official records shall be retained for not less than five years or for as long as the structure or activity to which such records relate remains in existence, or in accordance with San Bernardino County Fire Protection District Operations Directive 1300 and the Special Districts Records Retention Schedule, whichever is greater.

14. Permits Required.

A permit is required to conduct any activity, business, construction, work or use of equipment or to install or modify systems or equipment requiring a permit pursuant to Section 105 of the California Fire Code. Permits shall be obtained from the Fire Code

Official. Permit fees shall be paid prior to the issuance of the permit.

15. Fees.

(a) Reasonable fees, not to exceed the actual costs, for any permit, license, inspection, plan or technical review, related work or services required pursuant to this Code, the California Fire Code or the San Bernardino County Fire Department Fire Prevention Standards shall be paid pursuant to a fee schedule established by action of the Board of Directors, as may be amended from time to time.

(b) Any person who conducts any activity, business, construction, work or use of equipment or to install or modify systems or equipment requiring a permit pursuant to Section 105 prior to obtaining said permits shall be subject to an additional fee, which shall be in addition to the required permit.

16. Applications and Permits – Abandonment, Period of Validity, Expiration and Extensions.

(a) An application for a permit for any proposed work or operation and its associated fee shall be deemed to have been abandoned if the applicant fails to submit any required documentation within 180 days after the date of filing or the date an application or plans have been returned by the Department for correction, or the date the Department has requested additional information or documentation. The Fire Code Official is authorized to grant one or more extensions of time to submit such documentation or corrections for a period not to exceed 90 days. All requests for extension shall be made, in writing, by the applicant prior to abandonment and shall provide justifiable cause to extend the application review period.

(b) Permits issued under the provisions of this Code shall remain in effect as follows:

(1) Operational permits shall remain in effect for a period of time as specified in the permit, not to exceed one year from issuance or until revoked.

(2) Construction permits shall automatically expire and become invalid unless the work authorized by such permit is commenced within 180 days after its

issuance, or if the work authorized by such permit is suspended or abandoned for a period of 180 days after the time the work is commenced. Suspension or abandonment shall mean that no inspection by the Department has occurred within 180 days of any previous inspection.

(3) After a construction permit becomes invalid or expired and before such previously approved work recommences, a new permit shall be first obtained and the fee to recommence work shall be payable according to the approved fee schedule, provided no changes have been made or will be made in the original construction documents for such work, and provided further that such suspension or abandonment has not exceeded one year. Permits which have been expired for one year or more shall be deemed invalid and will require a new application, payment of fees and submittal of plans and review.

(4) Notwithstanding any other provision of law, construction permits that have expired and are renewed are subject to any new applicable codes as would be required for a new project.

(c) A permittee holding an unexpired permit shall have the right to apply for an extension of the time within which the permittee will commence work under that permit when work is unable to be commenced within the time required by this Section for good and satisfactory reasons. The Fire Code Official is authorized to grant, in writing, one or more extensions of the time period of a permit for periods of not more than 180 days each. Such extensions shall be requested by the permittee in writing and justifiable cause shall be demonstrated. The Fire Code Official shall have the right to refuse a permit extension if it is determined that the permittee has no justifiable cause. If a permit extension is refused, the provisions of this Section shall apply upon expiration.

(d) Any application submitted or permit issued pursuant to a planning application process (including but not limited to Conditional Use Permits, Minor Use Permits, Site Plans, Tentative Tracts, Planned Developments, etc.) through the

Planning Division of the San Bernardino County Land Use Services Department and its successors, or a similar process through the planning department (or similar) of any political subdivision or district which contracts with the San Bernardino County Fire Protection District may, at the discretion of the Fire Code Official, be subject to the respective abandonment, period of validity, expiration and extension policies, rules and regulations of those entities in lieu of this Section.

17. Permits not Transferable.

(a) For operational permits, any change in occupancy, operation, tenancy, or ownership shall require that a new permit be issued.

(b) Pursuant to Business and Professions Code 7031.5, only a contractor, licensed by the State of California to perform the type of work proposed in the permit application, may apply for and be issued, a construction permit required pursuant to Section 105.7 et seq. of the San Bernardino County Fire Protection District Fire Code. Any change of contractor named to conduct the permitted work shall require that a new permit be issued.

EXCEPTIONS:

(1) Owner-Builders intending to occupy the single-family dwelling in which they obtain a permit to install a fire protection system if they have not constructed more than two such dwellings in the past year pursuant to Business and Professions Code Section 7062.12.

(2) Public agencies and those public utilities exempted pursuant to Business and Professions Code Section 7040 et seq.

18. Permit Revocation.

The Fire Code Official is authorized to revoke a permit issued pursuant to Section 105 of the San Bernardino County Fire Protection District Fire Code when it is found by inspection or otherwise that conditions including, but not limited to, any one of the following occurred:

(a) The permit is used for a location or establishment other than that for which it was issued;

(b) The permit is used for a condition or activity other than that listed on the permit;

(c) Conditions and limitations set forth in the permit have been violated;

(d) There have been false statements or misrepresentations as to the material facts in the application for permit or submitted plans or a condition of the permit;

(e) The permit is used by a different person or firm than the name for which it was issued;

(f) The permittee failed, refused or neglected to comply with orders or notices duly served in accordance with the provisions of this Code within the time provided therein;

(g) If a permit is revoked for any of the above reasons, the permit fee shall be abandoned.

(h) If the permit was issued in error or in violation of any state or federal law, local ordinance, regulation, this Code or the San Bernardino County Fire Department Fire Prevention Standards, the permit may be revoked. However, if any permit is revoked for this reason the permit fee shall be returned to the applicant.

19. Operation or Construction Without a Permit or With an Expired or Revoked Permit.

It shall be unlawful for any person to operate or allow the operation of any activity, business, construction, work or use of equipment or to install or modify systems or equipment requiring a permit pursuant to Section 105 of the San Bernardino County Fire Protection District Fire Code when said permits have not been obtained or said permits have expired or have been revoked.

20. Issuance of Stop Work Orders.

(a) The Fire Code Official is authorized to issue an order requiring any activity, business, construction, work or use of equipment to immediately cease

whenever it is found that such activity, business, construction, work or use of equipment is being performed in a manner in violation of this Code or in a dangerous or unsafe manner. Stop work orders may also be issued for any overcrowding beyond the approved capacity of a building.

(b) A stop work order shall be issued in writing and shall be given to the permittee or his agent, or to the person conducting the activity, business, construction, work or use of equipment if no permit has been issued. The stop work order shall state the reason for the order and the conditions under which the stopped activity, business, construction, work or use of equipment may resume.

(c) A device, tag or seal preventing the use of equipment in violation of this Code or posing a hazard may be affixed to the equipment at the time a stop work order is issued.

(d) The Fire Code Official may immediately abate or cause to be abated any overcrowding situation, or remove or cause to be removed any obstructions in aisles, passageways or other means of egress, including the cutting or removing of locks, chains or other means of sealing or blocking exits.

(e) Where an emergency or potential emergency exists, the Fire Code Official shall not be required to give written notice prior to stopping the work, abating an overcrowding situation or removing an obstruction that would prevent immediate egress in the event of an emergency.

(f) Upon issuance of a stop work order, the non-compliant, dangerous or unsafe activity, business, construction, work or use of equipment, overcrowding situation, or egress obstruction shall immediately cease or be abated.

21. Failure to Comply with a Stop Work Order.

It shall be unlawful for any person to continue any activity, business, construction, work or use of equipment after being issued a stop work order, except such work as that person is directed to perform by the Fire Code Official to remove a violation or unsafe condition.

22. Service of Notices and Orders.

Notices and Orders issued pursuant to this Code shall be served in the following manner:

(a) If a permittee or his agent, or the person conducting the activity, business, construction, work or use of equipment or other responsible party is present at the scene of the violation, the notice or order shall be issued by personal service.

(b) If the responsible party is a business, and the business owner is on the premises, the notice or order shall be personally served to the business owner. If the business owner is not on the premises and the only responsible party that can be located is the manager or on-site supervisor, the notice or order may be issued in the name of the business and a copy given to the manager or on-site supervisor. A copy of the notice or order shall also be mailed to the business owner by certified mail, return receipt requested, and by first class mail. If a copy of the notice or order that is sent by certified mail is returned by the United States Postal Service unsigned or marked "unclaimed" and/or "refused," then service by first class mail shall be deemed effective provided it is also not returned by the United States Postal Service.

(c) If a responsible party cannot be located at the premises or the activity, business, construction, work or use of equipment is located at an unattended or abandoned site, then a copy of the notice or order shall be posted in a conspicuous place on or near the site or equipment, if practicable, and a copy mailed by certified mail, return receipt requested, and by first class mail, to each responsible party at their last known addresses as they appear on the last County equalized assessment role, or any other available public records related to title or ownership of the property or equipment that is the subject of the notice or order. If the copy of the notice or order sent by certified mail to a responsible party is returned by the United States Postal Service with the mail receipt unsigned, or marked "unclaimed" and/or "refused," then service by first class mail shall be deemed effective provided it is also not returned by the United States Postal Service.

(d) The failure of any responsible party to receive a copy of the notice or order shall not affect the validity of the notice or order.

23. Tampering with Notices, Orders or Seals Unlawful.

It shall be unlawful to mutilate, destroy or tamper with or remove without authorization any notice, order, tag, sign, or seal posted or affixed by the Fire Code Official.

24. Overcrowding Unlawful.

It shall be unlawful for any person to allow overcrowding or admittance of any person beyond the approved capacity of a building or portion thereof.

25. Obstructed Egress Unlawful.

It shall be unlawful for any person to obstruct any aisle, passageway or other means of egress, or to lock, chain, bar or otherwise block any required means of egress.

26. Open Fires.

(a) **General.** It shall be unlawful for any person to kindle, or maintain an open fire, or for a person to allow an open fire to be kindled or maintained on their property except in accordance with the provisions of this Code and the San Bernardino County Fire Department Fire Prevention Standards.

(b) **Permit Required.** When required pursuant to this Code, a permit shall be obtained from the San Bernardino County Fire Protection District prior to kindling any open fire.

EXCEPTION: Barbecues used at one- and two-family dwellings unless otherwise regulated.

(c) **Prohibited Open Fires.** It shall be unlawful to kindle, or maintain, or to allow to be kindled or maintained on their property any of the following open fires anywhere within the jurisdiction of the San Bernardino County Fire Protection District:

(1) Any open fire that is offensive or objectionable because of smoke emission, ember production, or when local atmospheric conditions or circumstances

make such fires hazardous.

(2) Any open fire in which any waste or manufactured material, including but not limited to petroleum products and petroleum wastes; construction and demolition debris; coated wire; putrescible wastes; tires; tar; tarpaper; non-natural wood waste; processed or treated wood and wood products; metals; rubber; synthetics; plastics, including plastic film, twine and pipe; fiberglass; styrofoam; garbage; trash; refuse; rubbish; disposable diapers; ashes; glass; industrial wastes; manufactured products; equipment; instruments; utensils; appliances; furniture; cloth; rags; paper or paper products; cardboard; boxes; crates; excelsior; offal; swill; carcass of a dead animal; manure; human or animal parts or wastes, including blood; and fecal- and food-contaminated material, hazardous materials or wastes, paints, asbestos, trees, or other similar combustible or flammable solid, liquid or gaseous waste are burned.

(3) Any open fire in which wire is burned to remove insulation.

(4) Any open fire in which metals or motor vehicle bodies are burned to recover salvageable components.

(5) Any open fire using a "burn barrel" as prohibited pursuant to 17 CCR Section 93113(c)(2).

(6) Residential burning and Open Fires within the South Coast Air Quality Management District (SCAQMD) boundaries.

EXCEPTIONS:

(A) Open Burning Projects permitted by the Fire Code Official where a fire hazard is declared by the Fire Code Official and such fire hazard cannot be abated by any other means.

(B) Open Burning Projects within the SCAQMD boundaries conducted solely for the disposal of Russian Thistle or agricultural burning and under permit by the SCAQMD.

(C) Open Fires conducted for fire prevention or suppression training, prescribed burns conducted by fire protection agencies, fireworks displays and

pyrotechnic special effects under permit, and bomb, explosives, fireworks or contraband disposal or training by a law enforcement or fire protection agency.

(D) Recreational Fires conducted in accordance with this Section.

(E) Barbecues and Barbecue Pits

(7) Any other open fire conducted in violation of this Code or the San Bernardino County Fire Department Fire Prevention Standards.

(d) **Special Burn Prohibitions.**

It shall be unlawful to kindle, or maintain any open fire, or allow any open fire to be kindled or maintained on their property under the following conditions:

(1) An Open Burning Project or Residential Burning on any day other than a Permissive Burn Day as declared by the Air Quality Management District in which the burning will occur.

(2) An Open Burning Project, Residential Burning, Bonfire, or Barbecue Pit on a property within any Wildfire Risk Area as defined in Section 202.

EXCEPTION:

(A) A Bonfire or Barbecue Pit may be kindled within a Wildfire Risk Area if within an Organized Camp or other location with the specific written approval of the Fire Code Official and all requirements of this Section are adhered to.

(B) Open Burning Projects permitted by the Fire Code Official where a fire hazard is declared by the Fire Code Official and such fire hazard cannot be abated by any other means.

(3) When local sustained winds exceed 10 miles per hour.

EXCEPTION:

Covered barbecues, or Recreational Fires confined to a permanent fire ring and fueled solely by liquefied petroleum gas or natural gas, or Portable Outdoor Fireplaces fueled solely by liquefied petroleum gas or natural gas.

(4) Within the boundaries of a State Responsibility Area, including

private property, in violation of any requirements or burn restriction imposed by the California Department of Forestry & Fire Protection (CalFire) or the California Office of the State Fire Marshal.

(5) Within the boundaries of the San Bernardino National Forest, including private property, in violation of any requirements or burn restriction imposed by the Forest.

(6) Within the boundaries of the Bureau of Land Management (BLM) land, including private property, in violation of any requirements or burn restriction imposed by BLM.

(7) When a Red Flag Warning or Fire Weather Watch is in effect for the location in which the fire is to be kindled.

EXCEPTION:

Covered barbecues, or Recreational Fires confined to a permanent fire ring and fueled solely by liquefied petroleum gas or natural gas, or Portable Outdoor Fireplaces fueled solely by liquefied petroleum gas or natural gas.

(8) When the Fire Code Official has determined that local atmospheric or other conditions present an increased risk of an escaping fire or other hazardous situation.

(e) **Authorization.**

(1) A permit to kindle a fire shall only be issued to the owner of the property upon which the fire is to be kindled.

EXCEPTION: When written authorization from the property owner is provided, a permit may be issued to the person named in the authorization.

(2) Prior to applying for a permit to conduct an Open Burning Project, written authorization or a permit from the Air Quality Management District (AQMD) for the area in which the burning will occur must be provided. When authorized by the AQMD, the San Bernardino County Fire Protection District may issue that permit.

(f) **Extinguishment Authority.** The Fire Code Official is authorized to order

or cause the extinguishment of any fire that creates or adds to a hazardous condition, creates smoke emissions offensive to occupants of surrounding properties, is conducted without a permit when such a permit is required, or is conducted outside of the parameters set forth in this Section or a permit, when required. This authority includes ordering the extinguishment of a fire within the fireplace of a private residence when such a fire meets the criteria above.

(g) **Specific Fire Requirements.** All open fires shall also meet the following requirements:

(1) **Open Burning Projects.** All Open Burning Projects shall meet the requirements of this Section and the requirements of Rule 444 of the AQMD in which the Open Burning Project will occur.

(A) Permits. A permit to kindle or maintain an Open Burning Project shall be obtained from the AQMD and the Fire Code Official prior to kindling the fire. All conditions of the permit and the AQMD's Rule 444 shall be adhered to.

(B) Burn Periods. Open Burning Projects shall only be commenced and shall be completed within the periods specified in Rule 444 of the AQMD in which the burn will occur, the periods specified in the municipal code of the city or town in which the burn will occur, or the periods specified in the San Bernardino County Fire Department Fire Prevention Standards, whichever is most restrictive.

(C) Location.

(I) Open Burning Projects shall not be located less than 50 feet from any structure or combustible materials.

EXCEPTION: When burn piles do not exceed 3 feet in width or 2 feet in height, the minimum distance from a structure or other combustible materials may be reduced to 25 feet.

(II) Open Burning Projects may only take place at the location for which the permit is issued.

(D) Open Burning Project Piles.

(I) Piles to be burned shall not exceed 6 feet in width or 4 feet in height.

(II) Piles to be burned shall be separated by a minimum of 10 feet.

(III) Piles to be burned shall not be placed in a pit or depression.

(2) **Bonfires.**

(A) Permits. A permit to kindle or maintain a bonfire shall be obtained from the Fire Code Official prior to kindling the fire. All conditions of the permit shall be adhered to.

(B) Location. A bonfire shall not be kindled or maintained within 50 feet from any structure or combustible materials.

EXCEPTION: When a bonfire is confined to a barbecue pit and is used solely to produce coals for cooking, the minimum distance from a structure or other combustible materials may be reduced to 30 feet.

(3) **Recreational Fires.**

(A) Permits. A permit to kindle a Recreational Fire shall be obtained from the Fire Code Official pursuant to this Code prior to kindling the fire. All conditions of the permit shall be adhered to.

EXCEPTION: When a Recreational Fire, confined to a permanent fire ring, is fueled solely by liquefied petroleum gas or natural gas, a permit is not required.

(B) Location.

(I) A Recreational Fire shall not be kindled or maintained within 25 feet of a structure or combustible materials.

EXCEPTION: When a Recreational Fire, confined to a permanent fire ring, is fueled solely by liquefied petroleum gas or natural gas, the minimum distance from a structure or other combustibles may be reduced to 15 feet.

(II) Recreational Fires located within a Wildfire Risk Area shall only be kindled within the property of an inhabited residence or a designated campsite.

(4) **Portable outdoor fireplaces.**

(A) Permits. A permit to kindle a fire in a Portable Outdoor Fireplace used within a Wildfire Risk Area shall be obtained from the Fire Code Official prior to kindling the fire. All conditions of the permit shall be adhered to.

EXCEPTION: When a Portable Outdoor Fireplace is fueled solely by liquefied petroleum gas or natural gas, a permit is not required.

(B) Location.

(I) A Portable Outdoor Fireplace used within a Wildfire Risk Area shall not be kindled or maintained within 15 feet of a structure or combustible materials.

EXCEPTION: At one- and two-family dwellings only, a Portable Outdoor Fireplace may be located on a combustible patio or balcony if provisions are made to prevent to Portable Outdoor Fireplace from contacting any combustible materials.

(II) Portable Outdoor Fireplaces shall not be located on any patio or balcony which is part of a multi-family dwelling such as an apartment, or attached townhomes or condominiums.

(C) Spark Arrestors. All Outdoor Fireplaces, portable or fixed, shall have a spark arresting screen covering all openings and constructed in accordance with Section 305.5 of the California Fire Code, as amended.

(5) **Barbecues and Barbecue Pits.** A fire in a Barbecue Pit with total fuel area greater than 3 feet in width or 2 feet in height shall meet the requirements of a Bonfire pursuant to Section 26(g)(2).

(A) Permits.

(I) A permit to kindle a fire in a barbecue is not required.

(II) A permit to kindle a fire in a Barbecue Pit shall be obtained from the Fire Code Official prior to kindling the fire. All conditions of the permit shall be adhered to.

(B) Location.

(I) Barbecues shall not be operated on combustible balconies or decks, or within 10 feet of combustible construction.

Exceptions:

(i) One- and two-family dwellings where provisions are made to prevent the fire from spreading to any combustible materials.

(ii) Where buildings, balconies and decks are protected by an automatic sprinkler system.

(iii) LP-gas cooking devices having an LP-gas container with a water capacity not greater than 2 ½ pounds. Containers shall not be manifolded together to increase capacity.

(iv) Cooking devices heated solely using a catalytic heating element with no flame production.

(II) A Barbecue Pit shall not be kindled or maintained within 20 feet of a structure or combustible materials.

(h) All Open Fires shall be constantly attended by a responsible adult, 18 years of age or older, until the fire is completely extinguished. A minimum of one portable fire extinguisher complying with Section 906 with a minimum 4-A rating or other approved on-site fire-extinguishing equipment such as dirt or sand with a shovel, water barrel, hose attached to a working water source, or water truck, shall be available for immediate utilization.

(i) Ash and Ember Disposal. Ashes and embers from any open fire, barbecue or fireplace shall be placed only in a covered metal or other non-combustible container after being thoroughly cooled with water. At no time shall ashes or embers be deposited in the trash or on the ground, or placed on a combustible surface until it is

confirmed that the ashes or embers are no longer hot to the touch.

27. Explosives, Fireworks, Pyrotechnics, Rockets and Rocket Motors

(a) It shall be unlawful for any person to manufacture, store, possess, handle, sell, use, launch or create a public display of any Explosive, Firework, Pyrotechnic, Rocket or Rocket Motors except in accordance with the San Bernardino County Fire Protection District Fire Code Chapter 56 as adopted from the California Fire Code, the San Bernardino County Fire Department Fire Prevention Standards and Interpretations and any provision of any code or standard adopted or incorporated by reference by this Code.

EXCEPTIONS:

(1) The Armed Forces of the United States, Coast Guard or National Guard.

(2) Explosives in forms prescribed by the official United States Pharmacopoeia.

(3) The possession, storage and use of small arms ammunition when packaged in accordance with DOT packaging requirements.

(4) The use of explosive materials by federal, state and local regulatory, law enforcement and fire agencies acting in their official capacities.

(5) Items preempted by federal regulations.

(b) The storage of explosives and blasting agents is prohibited in residential areas, principal business districts, closely-built commercial areas and heavily-populated areas, except as permitted by the San Bernardino County Sheriff's Department and the San Bernardino County Fire Protection District in accordance with California Code of Regulations, Title 19, and Title 4, Division 5 of the San Bernardino County Code.

(c) Unless otherwise permitted, the possession, storage, use, sale and handling of any fireworks is prohibited within the County of San Bernardino and the District. The possession, storage, sale, handling and use of specific types of approved fireworks may be allowed pursuant to local laws, ordinances and regulations within

incorporated cities and towns of the County, provided such fireworks comply with California Code of Regulations, Title 19, and labeled "Safe and Sane" by the California State Fire Marshal.

(d) The Fire Code Official and his designees are authorized to seize, take, remove or cause to be removed, at the expense of the owner, all stocks of fireworks, including but not limited to, Division 1.4G consumer fireworks, as classified pursuant to Title 49 Code of Federal Regulations, possessed, offered or exposed for sale, stored or held in violation of any state or local laws and ordinances.

(e) The use of model and high-power rockets is prohibited within Wildfire Risk Areas as defined in San Bernardino County Fire Protection District Fire Code Section 202 (as amended) except as permitted by the San Bernardino County Fire Protection District.

(f) Permits shall be required as set forth in San Bernardino County Fire Protection District Fire Code Section 105.6.14 (as amended) and regulated in accordance with this Section. Permits shall be obtained from the San Bernardino County Fire Protection District and the San Bernardino County Sheriff's Department in accordance with Title 4, Division 5, Chapter 2, Section 45.0201 of the San Bernardino County Code to:

(1) manufacture, possess, store, sell, display or otherwise dispose of explosive materials at any location;

(2) transport explosive materials;

(3) use explosive materials;

(4) operate a terminal for handling explosive materials; or

(5) transport blasting caps or electric blasting caps on the same vehicle with explosives.

(g) In addition to the requirements set forth in this chapter, the Sheriff's Department or the Fire Protection District may, for the safety and security of the public, set additional requirements for a permit application. The Sheriff's Department shall

notify the Fire Protection District, as soon as practicable, when any application has been made for an explosives permit for a specific location and purpose.

(h) The Fire Code Official is authorized to limit the quantity of explosives, explosive materials, or fireworks permitted at a given location. No person, possessing a permit for storage of explosives at any place, shall keep or store an amount greater than authorized in such permit. Only the kind of explosive specified in such a permit shall be kept or stored.

(i) Whenever a new explosive material storage or manufacturing site is established, including a temporary job site, the local law enforcement agency, fire department, and local emergency planning committee shall be notified by the person establishing the site 48 hours in advance, not including Saturdays, Sundays and holidays, of the type, quantity and location of explosive materials at the site.

(j) The Fire Code Official is authorized to cause to be removed or disposed of by trained explosives personnel, at the expense of the owner, explosives or explosive materials offered or exposed for sale, stored, possessed or used in violation of this Section.

(k) Notwithstanding any other provisions of Federal and State law, the manufacture, storage, handling, sale, use or public display of any quantity of explosives, explosive materials, fireworks or pyrotechnics including pyrotechnic special effects, model rockets, high-power rockets and experimental rockets shall meet the requirements of this Code and the San Bernardino County Fire Department Fire Prevention Standards as well as the following requirements, whichever are most restrictive:

(1) <u>Explosives:</u>

(A) California Health and Safety Code Division 11, Part 1

(B) 19 CCR, Division 1, Chapter 10,

(C) San Bernardino County Code Title 4, Division 5,

(D) NFPA 495.

(2) Fireworks Manufacture, Transportation, Storage, and Sales:

(A) California Health and Safety Code Division 11, Part 2

(B) 19 CCR, Division 1, Chapter 6,

(C) NFPA 1124.

(3) Fireworks Display:

(A) California Health and Safety Code Division 11, Part 2

(B) 19 CCR, Division 1, Chapter 6, Article 5,

(C) NFPA 1123

(4) Pyrotechnics:

(A) California Health and Safety Code Division 11, Part 2

(B) 19 CCR, Division 1, Chapter 6, Article 15,

(C) NFPA 1126.

(5) Model Rockets:

(A) 19 CCR, Division 1, Chapter 6, Article 17,

(B) NFPA 1122.

(6) Experimental Rockets/Unlimited:

(A) 19 CCR, Division 1, Chapter 6, Article 16,

(B) NFPA 1127

(7) Experimental High-Power Rockets:

(A) 19 CCR, Division 1, Chapter 6, Article 18,

(B) NFPA 1127

(8) Manufacture of Rocket Motors:

(A) 19 CCR, Division 1, Chapter 6,

(B) NFPA 1125

(I) Prior to conducting a public fireworks display, a permit shall be applied for as specified in section 105.6.14 from the San Bernardino County Fire Protection District, permit fees shall be paid, and plans for the display, inspections of the display site and demonstrations of the display operations shall be approved. A plan establishing

procedures to follow and actions to be taken in the event that a shell fails to ignite in, or discharge from, a mortar or fails to function over the fallout area or other malfunctions shall be provided to the Fire Code Official.

28. Prohibited Storage of Flammable and Combustible Liquids.

The storage of flammable and combustible liquids in outside above-ground unprotected tanks and below-grade vaulted tanks is prohibited in all commercial occupancy areas, developed residential areas, and other areas where the Fire Code Official determines that the installation of flammable and combustible liquid above-ground storage tanks or below-grade vaulted tanks will create a hazard to occupants and property owners in the area. Deviation from these requirements may be allowed only upon specific documented findings by the Fire Code Official.

29. Prohibited Bulk Storage of Liquefied Petroleum Gases.

The aggregate capacity of any one installation for the bulk storage of liquefied petroleum gases shall not exceed 2,000 water gallons in residential areas. In non-residential areas, when, in the opinion of the Fire Code Official, the location of bulk storage of liquefied petroleum gases would create a threat to the occupants and property owners, the aggregate storage capacity of liquefied petroleum gas shall also be limited to 2,000 water gallons. The Fire Code Official shall be guided by the appropriate City or County Development Code when permitting the storage of liquefied petroleum gas in excess of 2,000 water gallons at any one installation.

30. Prohibited Storage of Flammable Cryogenic Fluids.

Pursuant to Section 5806.2 of the San Bernardino County Fire Protection District Fire Code as adopted from the California Fire Code, flammable cryogenic fluids shall not be stored, dispensed or used unless a written plan, submitted by a Fire Prevention Engineer, licensed by the State of California, detailing engineering controls for preventing fires and explosions is approved by the Fire Code Official.

31. Transport vehicles and trailers storing hazardous materials.

(a) Any transport vehicle with a trailer, such as a tank, vessel, or other

container, attached and used for the purposes of storing and transporting hazardous materials or hazardous waste as defined by this Code, upon being at a facility or property for more than 30 days, or when such trailer has been detached from its mode of transportation, or when the driver of such a vehicle is not carrying active shipping papers as regulated by the California Department of Transportation (DOT) enroute to another destination, shall comply with the provisions of this Section.

(b) **General.** Transport vehicles and trailers that contain less than or equal to the maximum allowable quantities as set forth in Section 5003 of the San Bernardino County Fire Protection District Fire Code as adopted from the California Fire Code for each specific material, shall comply with the requirements of Chapter 50 of the San Bernardino County Fire Protection District Fire Code, as well as any other applicable regulations as part of a facility. Transport vehicles and trailers that contain more than the maximum allowable quantities as set forth in Section 5003 for each specific material shall comply with the requirements of Chapter 50 of this Code, as well as any other applicable regulations relevant to a facility. The use, dispensing and handling of any hazardous materials from transport vehicle trailers shall be prohibited unless approved in writing by the Fire Code Official.

(c) **Submittals.** Transport vehicles and associated trailers shall comply with the requirements of Section 5000.5.1 for Hazardous Materials Management Plan (HMMP) and Section 5001.5.2 for Hazardous Materials Inventory Statement (HMIS) as part of a regulated facility. These documents shall be submitted to the Office of the Fire Marshal of the San Bernardino County Fire Protection District.

(d) **Prohibited Areas.** Transport vehicles or detached trailers storing hazardous materials shall not be left stationary at any time within 500 feet (152m) of a residential area, apartment or hotel complex, educational facility, hospital or care facility. Transport vehicles and trailers shall not be left unattended at any other place that would, in the opinion of the Fire Code Official, pose an extreme life safety hazard.

32. Joint emergency and fire apparatus access roads. Emergency and fire

apparatus access roads passing through multiple parcels shall comply with the following requirements:

(a) Each owner of real property through which a joint emergency access road passes shall record an easement, running with the land, with the deed of each affected property allowing joint access to and from other properties and for emergency access.

(b) Each owner of property upon which the easement shall pass shall provide a notarized covenant agreeing to provide an emergency access road through each property and to maintain that access road in accordance with the statutes, regulations and standards applicable at the time the easement was recorded for full term of ownership of the property.

(c) Each owner of property through which the easement shall pass shall provide a notarized waiver with the deed releasing the San Bernardino County Fire Protection District, its successors and the County of San Bernardino of any liability for any inability to provide fire suppression or emergency medical aid due to lack of access and shall further stipulate that the San Bernardino County Fire Protection District, its successors and the County of San Bernardino shall not be party to any criminal, civil or administrative action relating to the maintenance of the easement unless the action is brought forth by the Department, its successors, or the County.

33. Violations – General.

It shall be unlawful for any person, firm, partnership, or corporation to violate any provision or fail to comply with any requirement of this San Bernardino County Fire Protection District Code, the California Fire Code, the California Residential Code, the San Bernardino County Fire Department Fire Prevention Standards, or of the provisions of any code adopted and incorporated by reference by this Code.

34. Continuing Violations.

Each and every day, and any portion of which, any violation of this Code, the California Fire Code, the San Bernardino County Fire Department Fire Prevention Standards or of the provisions of any code adopted and incorporated by reference by

this Code is committed, continued, or permitted shall be deemed a new and separate offense and shall be punishable or actionable as set forth in this Code.

35. Acts Including Causing, Aiding and Abetting.

Whenever in this Code any act or omission is made unlawful, it shall include causing, permitting, aiding or abetting such act or omission.

36. Enforcement – Purpose and Remedies.

The Board of Directors of the San Bernardino County Fire Protection District has determined that the enforcement of the ordinances of the San Bernardino County Fire Protection District (also known as the San Bernardino County Fire Protection District Code) throughout the County is an important public service and is vital to the protection of the public's health, safety, and quality of life. The Board of Directors has determined a need for alternative methods of code enforcement and that a comprehensive system is necessary. At the discretion of the Department, violations of this Code may be addressed through the institution of a criminal action, a civil action, or an administrative action (administrative citations and penalties) as set forth in this Code.

37. Enforcement Remedies and Penalties are Cumulative and Discretionary; Not Exclusive.

All remedies and penalties provided for in this Code shall be cumulative and discretionary and not exclusive of other applicable provisions of this Code or other applicable state law. The conviction and punishment (whether by fine, imprisonment, or both) of any person hereunder pursuant to a criminal action, or the imposition of a monetary administrative penalty pursuant to an administrative citation, shall not relieve such person from the responsibility of correcting, removing, or abating the violation; nor prevent the enforced correction, removal, or abatement thereof by the District, its employees, agents, or representatives. The correction, removal, or abatement of a violation begun after the issuance of a criminal citation or the filing of a criminal complaint shall not be a defense to the infraction or misdemeanor so charged and, following a conviction or plea of nolo contendere (commonly called "no contest"), shall

not be grounds for the dismissal of the action or the waiver, stay, or reduction of any fine established in this Code. Further, the procedures established in this Code for the use of administrative citations, and the procedures established in other titles and chapters of this Code for administrative abatement and summary abatement as means for addressing violations of this Code shall be in addition to criminal and civil or other legal or equitable remedies established by law which may be pursued to address violations of this Code. The use of this chapter shall be at the sole discretion of the District. In the exercise of such discretion in selecting an appropriate code enforcement remedy, the District shall not be required to institute available code enforcement remedies in any particular order, or to prefer the application of one remedy to another.

38. Criminal Actions.

(a) **Criminal penalties for violations.**

Any person violating this San Bernardino County Fire Protection District Code, the California Fire Code, the California Residential Code, the San Bernardino County Fire Department Fire Prevention Standards or of the provisions of any code adopted and incorporated by reference by this Code, unless as otherwise specified for certain sections or for sections within a certain chapter, shall be deemed guilty of an infraction or misdemeanor as hereinafter specified.

(1) **Misdemeanor violations.** Upon conviction of a misdemeanor, or upon a plea of nolo contendere (commonly called "no contest"), the penalty shall be a base fine of not less than $500.00 and not more than $1,000.00, or by imprisonment in the County jail for a period of not more than six months, or by both such base fine and imprisonment. Any court costs that the court may otherwise be required to impose pursuant to applicable state law or local ordinance shall be imposed in addition to the base fine.

(2) **Infraction violations.** Notwithstanding the foregoing, a misdemeanor violation may be cited, charged, and prosecuted as an infraction. Where so prosecuted, or where specified in a section or chapter of this Code that the violation

of a certain section or sections shall be an infraction, then that shall be the type of offense and each such violation shall be punishable, except as otherwise provided herein, upon conviction or upon a plea of nolo contendere (commonly called "no contest"), by a base fine not exceeding $100.00 for a first violation; (2) a base fine not exceeding $500.00 for a second violation of the same Code section within one year; and (3) a base fine not exceeding $1,000.00 for each additional violation of the same Code section within one year of the first violation. Any court costs that the court may otherwise be required to impose pursuant to applicable state law or local ordinance shall be imposed in addition to the base fine (Government Code section 25132).

(b) **Criminal citations.**

(1) If any person is arrested by a District Investigator or any other peace officer authorized to enforce this Code for a violation of any provision of this Code, whether punishable as misdemeanor or as an infraction, and such person is not immediately taken before a magistrate, when authorized by and as more fully set forth in the Penal Code of California, the arresting officer shall prepare in duplicate a written notice to appear in Court, containing the name and address of such person, the offense charged, and the time and place where and when such person shall appear in court.

(2) The place specified in the notice to appear shall be the court of a magistrate before whom the person would be taken if the requirement of taking an arrested person before a magistrate were complied with, or shall be an officer authorized by such court to receive a deposit of bail.

(3) The officer shall deliver one copy of the notice to appear to the arrested person, and the arrested person, in order to secure release, must give his or her written promise so to appear in court by signing the duplicate notice which shall be retained by the officer. Thereupon the arresting officer shall forthwith release the person arrested from custody.

(4) The officer shall, as soon as practicable, file the duplicate notice with the magistrate specified therein. Thereupon, the magistrate shall fix the amount of

bail which in his or her judgment, in accordance with the provisions of Penal Code section 1275, will be reasonable and sufficient for the appearance of the defendant and shall endorse upon the notice a statement signed by him or her in the form set forth in Penal Code section 815a. The defendant may, prior to the date upon which he or she promised to appear in court, deposit with the magistrate the amount of bail thus set. Thereafter, at the time when the case is called for arraignment before the magistrate, if the defendant shall not appear, either in person or by counsel, the magistrate may declare the bail forfeited, and may in his or her discretion order that no further proceeding shall be had in such case.

(5) Upon the making of such order that no further proceedings be had, all sums deposited as bail shall forthwith be paid into the County Treasury for distribution pursuant to Penal Code section 1463.001.

(6) No warrant shall issue on such charge for the arrest of a person who has given such promise to appear in court, unless and until he or she has violated such promise or has failed to deposit bail, to appear for arraignment, trial or judgment, or to comply with the terms and provisions of the judgment, as required by law.

(7) When a person signs a written promise to appear at the time and place specified in the written promise to appear, and has not posted bail as provided in Penal Code section 853.6, the magistrate shall issue and have delivered for execution a warrant for his or her arrest within 20 days after his failure to appear as promised; or if such person promises to appear before an officer authorized to accept bail, other than the magistrate, and fails to do so on or before the date on which he or she promised to appear, then, within 20 days after the delivery of such written promise to appear by the officer to the magistrate having jurisdiction over the offense.

(8) Nothing herein contained shall be deemed or construed to require any arresting officer to issue a citation instead of taking the person arrested before a magistrate as otherwise provided by law.

39. Authority to Investigate, Detain, Issue Criminal Citations and Arrest.

(a) District Investigators designated by the Fire Chief/Fire Warden are peace officers pursuant to California Penal Code Section 830.37(a), shall have full peace officer powers pursuant to that Section and shall investigate the cause, origin and circumstances of any fire, explosion or other hazardous condition. Department Investigators are authorized to wear and carry authorized firearms, conduct investigative detentions, issue criminal citations, to make arrests pursuant to California Penal Code Section 836 for any violation of this Code, the San Bernardino County Fire Department Fire Prevention Standards or any referenced or state law, obtain and execute warrants and to seize and take charge of all physical evidence relating to the fire cause or other crime or circumstance being investigated.

40. Civil Actions.

(a) **Injunctive relief and abatement.** At the request of any person authorized to enforce this Code, the County Counsel or District Attorney may commence proceedings for the abatement, removal, correction and enjoinment of any act or omission that constitutes or will constitute a violation of this Code, the California Fire Code, the California Residential Code, the San Bernardino County Fire Department Fire Prevention Standards or of the provisions of any code adopted and incorporated by reference by this Code or any permit issued pursuant to this Code, or any condition(s) of approval for such permit granted pursuant thereto, and an order requiring the violator(s) to pay civil penalties and/or abatement costs. Where multiple violators are involved, they shall be jointly and severally liable for the civil penalties and/or abatement costs.

(b) **Civil Remedies and Penalties.** Any person, whether acting as principal, agent, employee, owner, lessor, lessee, tenant, occupant, operator, contractor, or otherwise, who violates any provision of this Code, or any permit issued pursuant to this Code, the California Fire Code, the San Bernardino County Fire Department Fire Prevention Standards or any condition(s) of approval for such permit granted pursuant thereto, shall be liable for a civil penalty not to exceed one thousand dollars ($1,000.00)

per violation for each day or any portion thereof, that the violation continues to exist. In determining the amount of civil penalty to be imposed, both as to the daily rate and the subsequent total amount for any given violation, the court shall consider all relevant circumstances, including, but not limited to, the extent of the harm caused by the conduct constituting the violation; the nature and persistence of such conduct; the length of time over which the conduct occurred or was repeated; the assets, liabilities, and net worth of the violator; whether the violator is a corporate entity or an individual; and any corrective action taken by the violator.

(c) **Attorney's fees.** In any civil action, administrative proceeding (excluding administrative citations issued pursuant to sections 41, 42, 43 or 44), or special proceeding to abate a public nuisance, whether by seeking injunctive relief and/or an abatement order, or other order, attorney's fees may be recovered by the prevailing party and shall not exceed the amount of reasonable attorney's fees incurred by the District in that action or proceeding.

41. Administrative Citations and Penalties - General.

(a) Any violation of this Code, the California Fire Code, the California Residential Code, the San Bernardino County Fire Department Fire Prevention Standards or of the provisions of any code adopted and incorporated by reference by this Code is subject to enforcement through the issuance of an administrative citation and penalties in accordance with Government Code section 53069.4 and this Section. Administrative citations may be issued for any violation of this Code not occurring in the presence of the officer issuing the citation where the issuing officer determines through investigation that the responsible party committed, caused, allowed, or is otherwise responsible for the violation. The following procedures shall govern the imposition, enforcement, collection, administrative review, and judicial review of administrative citations and penalties.

(b) **Definitions.** For the purposes of this Code, certain words are defined as follows:

(1) "Abatement costs" shall mean any and all costs or expenses reasonably related to the abatement or removal of conditions which violate any provision of this Code or the correction of such violation, and shall include, but not be limited to, enforcement, investigation, collection, administrative costs, and attorney's fees.

(2) "Administrative costs" shall mean all costs incurred by or on behalf of the District from the first discovery of the violation of this Code through the appeal process and until compliance is achieved, including but not limited to, staff time in investigating the violation, inspecting the property where the violation occurred, preparing investigation reports, sending notices, preparing for and attending any appeal hearing, telephone contacts, and correspondence.

(3) "Administrative citation" shall mean a citation issued pursuant to this Code, stating that one or more violations of this Code has occurred and stating the amount of the administrative penalty to be paid by the responsible party.

(4) "Ordinances of the San Bernardino County Fire Protection District," and "San Bernardino County Fire Code," and "this Code" shall mean the Ordinances of the San Bernardino County Fire District, including all pertinent provisions of state codes as from time to time adopted and incorporated therein, enacted by the Board of Directors of the San Bernardino County Fire Protection District, acting pursuant to authority granted under California Health and Safety Code sections 13861, 13869, and 13869.7; or other applicable law.

(5) "County" shall mean San Bernardino County and, as it is also known, the County of San Bernardino, a political subdivision of the State of California, as enacted by the State Legislature by the Statutes of California passed at the Fourth Session of the Legislature, Chapter LXXVIII, April 26, 1853.

(6) "District" shall mean the San Bernardino County Fire Protection District.

(7) "Enforcement Officer" shall mean any San Bernardino County Fire

Protection District employee, or agent of the County or District with the authority to enforce any provision of this Code, pursuant to Sections 32, 34 and 35 of this Code.

(8) "Person" shall mean, without limitation, any government entity, natural person, firm, association, club, organization, corporation, partnership, business, business trust, company or other entity, which is recognized by law as the subject of rights or duties.

(9) "Responsible party," for the purpose of this Code shall mean:

(A) Each person, other than a minor, who commits or causes a violation of any provision of this Code to occur, exist or continue;

(B) Each person who is the parent or legal guardian of the minor person who commits or causes a violation of any provision of this Code to occur, exist, or continue;

(C) Each person who has a legal or equitable ownership interest in any parcel of real property located within the unincorporated area of the County of San Bernardino, within any political subdivision or district that contracts with the San Bernardino County Fire Protection District for fire protection and prevention services, or within those other cities and towns that ratify this Ordinance, and who commits, causes, or otherwise allows the violation of any provision of this Code to occur, exist, or continue on such parcel; and

(D) Each person who, although not an owner, nevertheless has a legal right or legal obligation to exercise possession and control over any parcel of real property located within the unincorporated area of the County of San Bernardino, within any political subdivision or district that contracts with the San Bernardino County Fire Protection District for fire protection and prevention services, or within those other cities and towns that ratify this Ordinance, and who commits, causes, or otherwise allows the violation of any provision of this Code to occur, exist, or continue on such parcel; and

(E) In addition to the business entity itself, each person who is

an owner of that business entity in those cases in which the commission, occurrence, existence, or continuation of the violation of any provision of this Code is most reasonably attributable to that business entity and not to an employee of that business entity.

(c) **Content of Citation.** The administrative citation shall be issued on a form approved by the San Bernardino County Fire Protection District in consultation with County Counsel. The administrative citation form may be tailored to the specific needs of the issuing department as approved by the San Bernardino County Fire Protection District; however, all administrative citations shall contain the following information:

(1) The name and mailing address of the responsible party.

(2) The administrative citation shall refer to the date(s) and location of the violation and the approximate time(s), if applicable, that the violation was observed.

(3) The administrative citation shall identify each violation by the applicable section number of this Code and by either the section's title or a brief descriptive caption; or by reference to the applicable permit describing the condition violated.

(4) The administrative citation shall describe the action(s) required to correct the violations.

(5) The administrative citation shall require the responsible party to immediately correct the violation where appropriate or otherwise indicate a compliance deadline date and shall explain the consequences of failure to correct the violation.

(6) The administrative citation shall state the amount of the penalty imposed for the violation. Multiple violations may be listed on the same citation form. In the event of multiple violations, the administrative citation shall list the penalty amount for each violation and the total amount of all of the penalties.

(7) The administrative citation shall contain a notation box for the Enforcement Officer to indicate whether or not the citation is issued as a "warning only" and without penalty. The administrative citation shall also include a notation box that

may be used by the Enforcement Officer to indicate that the penalty will be waived if the violation is corrected by the compliance deadline date indicated on the citation form.

(8) The administrative citation shall explain how the penalty shall be paid and the time period by which it shall be paid, and the consequences of failure to pay the penalty within this time period.

(9) The administrative citation shall identify all appeal rights and include instructions on how to appeal the citation.

(10) The administrative citation shall contain the printed name and the signature of the Enforcement Officer issuing the citation and, where reasonably possible to obtain it, the signature of the responsible party (or managing employee if the responsible party is a business entity), if he or she can be located, as set forth in subsection (d) below.

(d) **Service of Citation.**

(1) If the responsible party is present at the scene of the violation, the Enforcement Officer shall attempt to obtain his/her signature on the administrative citation and shall deliver a copy of the administrative citation to him/her.

(2) If the responsible party is a business, and the business owner is on the premises, the Enforcement Officer shall attempt to deliver the administrative citation to the business owner. If the Enforcement Officer is unable to serve the business owner on the premises and the Enforcement Officer can only locate the manager or on-site supervisor, the administrative citation may be issued in the name of the business and a copy given to the manager or on-site supervisor. A copy of the administrative citation shall also be mailed to the business owner by certified mail, return receipt requested, and by first class mail. If a copy of the administrative citation that is sent by certified mail is returned by the United States Postal Service unsigned or marked "unclaimed" and/or "refused", then service by first class mail shall be deemed effective provided it is also not returned by the United States Postal Service.

(3) If a responsible party cannot be located at the property, then a copy

of the administrative citation shall be posted in a conspicuous place on or near that property, if practicable, and a copy mailed by certified mail, return receipt requested, and by first class mail, to all responsible parties at their last known addresses as they appear on the last County equalized assessment role, or any other available public records related to title or ownership of the property that is the subject of the administrative citation. If the copy of the administrative citation sent by certified mail to a responsible party is returned by the United States Postal Service with the mail receipt unsigned, or marked "unclaimed" and/or "refused," then service by first class mail shall be deemed effective provided it is also not returned by the United States Postal Service.

(4) The failure of any responsible party to receive a copy of the administrative citation shall not affect the validity of the proceedings.

(e) **Administrative Penalties - General.**

(1) Pursuant to California Government Code sections 53069.4 and 25132(c) and unless otherwise provided in this Code, the amount of penalty to be imposed for a violation of this Code and assessed by means of an administrative citation shall be one hundred dollars ($100.00) for the first occurrence of a violation; five hundred dollars ($500.00) for the second occurrence of the same violation; and one thousand dollars ($1,000.00) for the third and each subsequent occurrence of the same violation. Notwithstanding this paragraph, the amount of penalty to be assessed by means of an administrative citation may be established by resolution of the Board of Directors of the San Bernardino County Fire Protection District.

(2) **Administrative Penalties – Multiple Violations.**

Notwithstanding the tables of administrative penalties for violations relating to Dangerous Fireworks, Safe and Sane Fireworks, False and Negligent Alarms and those violations defined as egregious violations, when multiple violations of this Code, the California Fire Code, the California Residential Code and the San Bernardino County Fire Department Fire Prevention Standards or any provision of a code or standards adopted or incorporated by reference by this Code occur concurrently and

are addressed through the Administrative Citation process pursuant to this section, the Fire Code Official may, at his discretion, assess administrative penalties in the following manner:

(A) The administrative penalty for the first and second violation occurring concurrently shall be the full penalty as defined by Section 41(e)(1).

(B) The administrative penalties for the third and subsequent violations occurring concurrently may be reduced to twenty-five ($25.00) dollars per violation.

(C) This alternative penalty system shall only apply to the first occurrence within a 1-year period.

(3) If the violation is not corrected within the time limits established in this section, then additional administrative citations may be issued for the same violation. The amount of the penalty shall increase at the rate specified above.

(A) Payment of the penalty shall not excuse the failure to correct the violation nor shall it bar further enforcement action by the San Bernardino County Fire Protection District or any other enforcement agency authorized to issue administrative citations.

(B) The penalties assessed shall be payable to the District (or to the District's designated collection/processing agent), or to any enforcement agency authorized to issue administrative citations (or to such agency's designated collection/processing agent) within 30 calendar days from the date the administrative citation is issued.

(C) Except as provided below, any person who fails to pay to the District (or the District's designated collection/processing agent), or to any enforcement agency authorized to issue administrative citations (or such agency's designated collection/processing agent) any penalty imposed pursuant to the provisions of this Code on or before the date that the penalty is due shall also be liable for the payment of any applicable late payment charges as established by the Board of Directors.

(D) The District may collect any past due administrative citation penalty or late payment charge by use of any available means, including without limitation, the recording of a notice of lien, describing the real property affected and the amount of the costs and administrative citation penalties claimed by the District with the Office of the County Recorder. The District may transmit notice of the award of abatement costs and administrative citation penalties, or notice of the judgment thereon arising from a collection or other legal action, to the Treasurer/Tax Collector who shall place the amount thereof on the assessment role as a special assessment to be paid with County taxes, unless sooner paid. The District may also recover its collection costs. A judgment or award of such costs, penalties or damages may also be enforced in any other manner provided by law.

(E) The District may also recover its administrative costs incurred in defending the citation at the appeal hearing.

(F) All administrative citation penalties collected pursuant to these provisions shall be deposited into specific funds maintained by or on behalf of the District exclusively for the purpose of funding the enforcement of this Code.

42. Administrative Citations and Penalties – Dangerous Fireworks, and Unlawful Use of Safe & Sane Fireworks.

(a) This section governs, and applies only to, the imposition and enforcement of administrative penalties related to the storage, possession, handling, sale, use, transportation, or public display of those fireworks classified as "Dangerous Fireworks," and the unlawful use of Safe and Sane Fireworks.

(b) For the purposes of this section, the term "Dangerous Fireworks" shall be defined pursuant to California Health and Safety Code Section 12500, et seq. and shall also include "Safe and Sane" fireworks as defined in California Health and Safety Code Section 12529, which have been modified to act in the same manner as Dangerous Fireworks.

(c) The penalties enumerated in this section shall not apply to Law

Enforcement or Department personnel acting within the scope of their official duties or to a pyrotechnic licensee when operating pursuant to that license.

(d) The imposition of administrative penalties related to "dangerous fireworks" under this section shall be limited to persons who store, possess, handle, sell, use, transport, or publicly display 25 pounds or less (gross weight including packaging) of such dangerous fireworks. Any persons who store, possess, handle, sell, use, transport, or publicly display over 25 pounds (gross weight including packaging) of such dangerous fireworks may be subject to criminal action.

(e) Administrative penalties collected pursuant to this section related to "dangerous fireworks" shall not be subject to California Health and Safety Code Section 12706, which section provides that certain fines collected by a court of the state be deposited with, and disbursed by, the County Treasurer. However, the District shall provide cost reimbursement to the State Fire Marshal pursuant to regulations to be adopted by the State Fire Marshal addressing the State Fire Marshal's cost for the transportation and disposal of "dangerous fireworks" seized by the District, which costs will be part of any administrative penalty imposed. Unless and until said regulations have been adopted by the state of California, the District shall hold in trust two hundred fifty dollars ($250) of any penalty collected to cover the cost reimbursement to the State Fire Marshal for said cost of transportation and disposal of the "dangerous fireworks."

(f) Notwithstanding the penalties defined in this section, administrative citations issued pursuant to this section shall comply with all the requirements of Section 41 of this Code.

(g) Each person who violates any provision of this Code relating to the storage, possession, handling, sale, use, transportation, or public display of Dangerous Fireworks shall be subject to the imposition and payment of an increased administrative penalty as provided, below:

Administrative Penalties for Dangerous Fireworks			
Number of	Amount of	Late	Total Amount of

Occurrences in a 1-Year Period	Administrative Penalty	Charge	Penalty Plus Late Charge
First	$1,250.00	$125.00	$1,375.00
Second	$2,250.00	$225.00	$2,475.00
Three or More	$3,250.00	$325.00	$3,575.00

(h) Each person who violates any provision of this Code relating to the unlawful storage, possession, handling, sale, use, transportation, or public display of unmodified Safe and Sane fireworks shall be subject to the imposition and payment of an increased administrative penalty as provided in the table below:

Administrative Penalties for Safe and Sane Fireworks			
Number of Occurrences in a 1-Year Period	Amount of Administrative Penalty	Late Charge	Total Amount of Penalty Plus Late Charge
First	$150.00	$15.00	$165.00
Second	$250.00	$25.00	$275.00
Three or More	$350.00	$35.00	$385.00

(i) The issuance of an administrative citation pursuant to this section shall not preclude the Fire Code Official or any other person authorized to issue an administrative citation pursuant to this section from seizing any Dangerous Fireworks or unlawfully used Safe and Sane fireworks pursuant to this Code and California Health and Safety Code Section 12721.

43. Administrative Penalties – Egregious Violations.

(a) Any person who violates Section 21 relating to Stop Work Orders, Section 23 relating to tampering with notices, Section 24 relating to overcrowding, Section 25 relating to obstructed egress, Section 26 relating to unlawful open fires, and Section 27 relating to explosives and pyrotechnics or any other violation of this Code, the California Fire Code, the San Bernardino County Fire Department Fire Prevention Standards or of the provisions of any code adopted or incorporated by reference by this Code that is reasonably determined by the Fire Code Official to present an immediate or potentially immediate threat to public safety, shall be subject to the imposition and payment of an

increased administrative penalty as provided in the table below:

Administrative Penalties for Egregious Violations			
Number of Occurrences In a 1-Year Period	Amount of Administrative Penalty	Late Charge	Total Amount of Penalty Plus Late Charge
First	$250.00	$25.00	$275.00
Second	$750.00	$75.00	$825.00
Three or More	$1,250.00	$125.00	$1,375.00

(b) For the purposes of this section, each instance of a violation may be considered a separate violation subject to a separate penalty. However, multiple violations cited during a single occurrence or inspection shall not each be considered a separate occurrence incurring a higher penalty amount. EXAMPLE: During an inspection two required exit doors are found to be chained and the dance hall is overcrowded. An administration citation may be issued for three (3) counts of egregious violations at $250.00 each. An administrative citation for three (3) counts at $750.00 each shall not be issued.

44. Administrative Remedies and Penalties - False and Negligent Fire Alarm Program.

(a) Any person who violates the San Bernardino County Fire Department Fire Prevention Standards pertaining to the False and Nuisance Fire Alarm Program may be subject to the following remedies:

(1) An administrative penalty may be imposed against the owner of a premises on or in which a Fire Alarm System is installed or permitted for the following reasons:

(A) Upon the fourth or additional False or Nuisance Fire Alarm at a single premises.

(B) If the owner fails to return a satisfactory Report of Service/Repair within fifteen (15) days after receiving the Fire Alarm Activation Report due to a Nuisance Fire Alarm.

(C) If the person identified in the Registration as a responder and requested pursuant to the False and Nuisance Fire Alarms Program Standard fails to appear within one (1) hour after being notified to respond.

(2) An administrative penalty may be imposed against the Fire Alarm Business installing, repairing or providing monitoring or runner service for a Fire Alarm System for the following reasons:

(A) If the Fire Code Official determines that the fourth or additional False or Nuisance Fire Alarm was directly caused by an onsite employee or representative of the Fire Alarm Business. In this event, no False Fire Alarm shall be counted against the Owner.

(B) If the Fire Code Official determines that the person identified in the Registration as a responder and requested pursuant to the False and Nuisance Fire Alarms Program Standard is a runner provided for by the Fire Alarm Business and that person fails to appear within one (1) hour after being notified to respond. In this event, no False Fire Alarm shall be counted against the Owner.

(3) In lieu of or in addition to the Administrative Penalties listed above, the Fire Code Official is authorized to order the owner of a premises to:

(A) Silence an activated Fire Alarm System, have corrective action taken and thereafter reset it.

(B) Disconnect or deactivate the Fire Alarm System until corrective actions can be taken.

(C) Institute a Fire Watch due to repetitive Nuisance or False Fire Alarms or in the event a Fire Alarm System is silenced disconnected or deactivated, until corrective action is taken.

(4) The Owner is responsible for paying all costs associated with establishing a Fire Watch.

(5) The provisions of this section shall not apply to any newly installed Fire Alarm System for a period of forty-five days (45) from the date of installation.

(6) Notwithstanding the provisions of Section 41 as adopted from the California fire Code, no administrative citation shall be imposed for the first three (3) False or Nuisance Fire Alarms at the same premises during each calendar year; thereafter any further False or Nuisance Fire Alarms may result in the imposition of an administrative penalty pursuant to this Section against the owner or the Fire Alarm Business.

(7) The activation of a Fire Alarm System shall not result in the imposition of an administrative penalty if the alarm is activated due to malicious causes beyond the control of the owner unless the Fire Code Official has given written notice to the owner to provide reasonable safeguards against additional False Fire Alarms and the owner has failed to comply with that notice.

(8) Administrative Penalties.

(A) Any person who violates any provision of this section shall be subject to the imposition and payment of an administrative penalty as provided in the table below:

Administrative Penalties for False or Nuisance Fire Alarms			
Number of Occurrences In a 1-Year Period	Amount of Administrative Penalty	Late Charge	Total Amount of Penalty Plus Late Charge
Four to Five [1]	$100.00	$10.00	$110.00
Six to Seven	$200.00	$20.00	$220.00
Eight or More	$500.00	$50.00	$550.00

1. This penalty shall also apply to any occurrence of Sections 44(a)(1)(B), 44(a)(1)(C), and 44(a)(2)(B).

45. Appeal of Administrative Citations

(a) **Notice of Appeal.** Any person in whose name an administrative citation has been issued may appeal the administrative citation by filing a written notice of appeal with the District. If the District has designated a processing agent, then the responsible party shall file his/her written notice of appeal with the designated processing agent. The written notice of appeal must be filed within 20 calendar days of

the date the administrative citation was served in a manner set forth in subsection (d) of this Section. The written notice of appeal shall be filed together with an advance deposit, consisting of a cashier's check, for the full amount of the penalty stated on the administrative citation; unless the District has issued an advance deposit hardship waiver. Failure to file a written notice of appeal within this time period shall constitute a waiver of the right to appeal the administrative citation.

(b) **Advance Deposit Hardship Waiver.** Any person intending to appeal an administrative citation and who is financially unable to make the advance deposit as required by this section may file a written request for an advance deposit hardship waiver with the District. A District-approved form shall be made for this purpose. The written request shall be filed with the District within 10 calendar days of the date the administrative citation was served.

(c) **Advance Deposit Hardship Waiver Evaluation Procedures.** The advance deposit requirement shall be stayed pending a determination by the Fire Chief/Fire Warden, or the Fire Chief/Fire Warden's designee, that a waiver shall not be issued. The Fire Chief/Fire Warden, or the Fire Chief/Fire Warden's designee, may waive the advance deposit requirement and issue a waiver only if the person requesting the waiver submits to the Fire Chief/Fire Warden's attention a sworn affidavit, together with any supporting documents or materials, reasonably demonstrating to the Fire Chief/Fire Warden the person's actual financial ability to submit the deposit in advance of the appeal hearing. The filing of a written request for an advance deposit hardship waiver shall not extend the time limits for appealing an administrative citation. The Fire Chief/Fire Warden, or the Fire Chief/Fire Warden's designee, shall issue a written decision explaining the reason(s) for not issuing the waiver. The written decision of the Fire Chief/Fire Warden, or the Fire Chief/Fire Warden's designee, shall be final. In the event a waiver is not issued, the person intending to appeal must remit the advance deposit with a written notice of appeal as herein provided.

(d) **Contents of Notice of Appeal.** The notice of appeal shall be submitted

on District-approved forms and shall contain the following information:

(1) A brief statement setting forth the appealing person's (hereinafter "appellant") interest in the proceedings;

(2) A brief statement of the material facts which the appellant claims supports his/her contention that they did not commit, cause, or otherwise allow a violation of one or more provisions of this Code to occur, exist, or continue as alleged in the administrative citation at issue; or he/she is not a responsible party as defined at section 41(b)(9) of this Code.

(3) A mailing address at which the appellant agrees that notice of any additional proceeding, or an order relating to the imposition of an administrative citation penalty, shall be received and accepted by the appellant by First Class Mail.

(4) The notice of appeal must be signed and dated by the appellant.

(e) **Administrative Hearing.** The resolution of an appeal of an administrative citation issued under the authority of this Code shall be by an administrative hearing conducted according to the procedures set forth in this section. Upon the District's designated processing agent's receipt of a timely, written notice of appeal from the appellant, an administrative hearing shall be held as follows:

(1) **Hearing Date.** The date of the hearing shall be set for a date that is no later than 60 days from the date the notice of appeal is received by the District's processing agent.

(2) **Notice of Hearing.** Notice of the administrative hearing shall be given to the appellant at least 10 calendar days prior to the hearing. The notice may be delivered to the appellant or mailed by first class mail to the address listed in the notice of appeal. Neither personal service nor service by certified mail shall be required.

(3) **Hearing Officer.** The administrative hearing shall be held before the Fire Chief/Fire Warden, or the Fire Chief/Fire Warden's designee. The Hearing Officer shall not be the Enforcement Officer who issued the administrative citation or his/her immediate supervisor. The Fire Chief/Fire Warden, through the District's

contracting process, may contract with a qualified provider for administrative processing and collection services to provide hearing officers to conduct administrative hearings and process administrative citations, including the collection of payment of administrative citation penalties.

(4) **Conduct of the Hearing.**

(A) The Hearing Officer shall not be limited by the technical or formal rules of evidence. The District shall bear the burden of proof at the administrative hearing to establish the existence of a violation of this Code by a preponderance of the evidence. The Hearing Officer shall have the discretion to exclude evidence if its probative value is substantially outweighed by the probability that its admission will cause an undue consumption of time. The Enforcement Officer establishing or confirming the occurrence or existence of a violation of this Code shall be deemed the complaining or reporting party. Personal or other identifying information regarding any other reporting party shall be deemed both irrelevant and subject to the federal and state constitutional rights of privacy; and, therefore, shall not be subject to review or disclosure.

(B) If the appellant fails to appear at the administrative hearing, the Hearing Officer shall make his/her determination based on the information contained in the Enforcement Officer's case file and the appellant's notice of appeal.

(C) Provided that proper notice of the administrative hearing has been served as required by this or other applicable chapters of this Code, an appellant who fails to appear at the administrative hearing shall be deemed to have waived each of the following: the right to such hearing, the adjudication of issues presented at the hearing, and any and all rights afforded to the appellant under this Code. The appellant shall also be deemed to have failed to exhaust his/her administrative remedies.

(D) The only evidence that shall be permitted at the administrative hearing and considered by the administrative Hearing Officer in reaching a decision, is that evidence which is relevant to the proof or disproof of:

(I) Ownership of the subject property, when applicable;

(II) Whether a person noticed by the District as a responsible party is, in fact, a responsible party;

(III) Whether a violation of this Code occurred and/or continues to occur on the date or dates specified in the administrative citation;

(IV) Whether the responsible party has committed, caused, maintained, or permitted a violation of this Code on the date or dates specified on the administrative citation.

(f) **Hearing Officer's Decision.**

(1) After considering all the testimony and evidence submitted at the hearing, the Hearing Officer shall promptly issue a written decision ("Administrative Citation Appeal Ruling") to uphold or cancel the administrative citation and shall list in the decision the reasons for that decision.

(2) If the Hearing Officer determines that the administrative citation should be upheld, then the amount of the penalties set forth in the citation shall not be reduced or waived for any reason. This subsection shall not apply to "warning only" administrative citations or to any administrative citation that indicates on its face that the penalty will be waived if the violation is corrected by the deadline compliance date and the violation is so corrected.

(3) If the administrative citation has been upheld, the Hearing Officer may allow payment of the administrative penalty in installments, if an advance deposit hardship waiver has been issued to the appellant.

(4) If the Hearing Officer overturns the administrative citation, then no penalty shall be assessed and any penalty otherwise deposited with the District or its designated processing/collection agent, shall be promptly refunded to the appellant.

(5) The appellant shall be served with a copy of the Hearing Officer's written decision either at the conclusion of the hearing or sent by First Class Mail within a reasonable time. The Hearing Officer's written decision shall become final on the date

of the hearing unless mailed; otherwise it shall become final on the date of mailing.

(6) The Hearing Officer's written decision shall contain instructions for obtaining judicial review of the decision pursuant to California Government Code section 53069.4, as that section may be from time to time amended, or the successor provision thereto.

(7) If the administrative citation is upheld, the Hearing Officer shall also award the District its enforcement costs and its costs in defense of the citation (including the actual time spent conducting the hearing). An itemized summary of these costs shall be presented to the Hearing Officer by the District within 10 days following the Hearing and mailed to appellant by 1st Class Mail to the address listed on the Notice of Appeal.

(g) **Judicial Review of Administrative Hearing Officer's Decision.**

(1) **Notice of Appeal.** Within 20 calendar days of the date of the delivery or mailing of the Hearing Officer's decision to the appellant, the appellant (hereafter "contestant") may contest that decision by filing an appeal to be heard by the Superior Court, and paying to the court clerk the filing fee set forth at Government Code section 53069.4, or the successor provision thereto. The failure to file the written appeal and to pay the filing fee within this period shall constitute a waiver of the right to an appeal and the decision shall be deemed confirmed. The contestant shall serve a copy of the notice of appeal in person or by first class mail upon the District.

(2) **Conduct of the Superior Court Appeal Hearing.** The conduct of the appeal before the Superior Court is a subordinate judicial duty and may be performed by traffic trial commissioners and other subordinate judicial officers at the direction of the presiding judge of the Superior Court. The appeal shall be heard de novo, except that the contents of the District's file in the case shall be received in evidence. A copy of the document or instrument of the District providing notice of the violation and imposition of the administrative penalty (i.e., the administrative citation) shall be admitted into evidence as prima facie evidence of the facts stated therein. The court shall request that the District's file in the case be forwarded to the court, to be

received within 15 calendar days of the request.

(3) **Judgment.** The court shall retain the filing fee regardless of the outcome of the appeal. If the court finds in favor of the contestant, the amount of the fee shall be reimbursed to the contestant by the District. Any deposit of the administrative penalty shall be refunded by the issuing department in accordance with the judgment of the court. If the administrative penalty has not been deposited and the decision of the court is against the contestant and in favor of the District, the District may proceed to collect the penalty pursuant to the procedures set forth in this Code, or in any other manner provided by law.

46. Recording of a Notice of Pendency

(a) Whenever the District institutes a judicial action or proceeding to enforce this Code, a Notice of Pendency of the action or proceeding may be filed with the County Recorder's Office. The notice may be filed at the time of the commencement of the action or proceeding, and upon recordation of the notice as provided in this section, shall have the same effect as a notice recorded in compliance with section 409 of the California Code of Civil Procedure.

(b) The County Recorder shall record and index the Notice of Pendency of action or proceeding in the Grantor/Grantee Index.

(c) Any Notice of Pendency of action or proceeding filed in compliance with this section may, upon motion of a party to the action or proceeding, be vacated upon an appropriate showing of need therefore by an order of a judge of the court in which the action or proceeding is pending.

(d) A certified copy of the "Order to Vacate Notice of Pendency" may be recorded with the County Recorder's Office, and upon the recordation, the Notice of Pendency of the action or proceeding shall not constitute constructive notice of any of the matters contained therein nor create any duty of inquiry in any person thereafter dealing with the property described therein.

(e) An "Order to Vacate Notice of Pendency" shall not be appealable, but the

party aggrieved by the order may, within 20 days after service of written notice of the order, or within additional time not exceeding 20 days as the court may, within the original 20 days allow, but in no event later than 60 days after entry of the order, petition the proper reviewing court to review the order by Writ of Mandate.

(f) No "Order to Vacate Notice of Pendency" shall be effective, nor shall it be recorded with the County Recorder's Office, until the time within which a petition for the filing of a Writ of Mandate has expired in compliance with this section.

47. Filing Notice of Action.

Whenever an enforcement action is initiated and prior to filing a Notice of Pendency, the District may, pursuant to Government Code section 27280, file with the County Recorder's Office a Notice of Action identifying the enforcement action taken for violation of this Code or other applicable law.

48. Public Nuisance Abatement for Fire Hazards.

Any violation of this Code, the California Fire Code, the San Bernardino County Fire Department Fire Prevention Standards or of the provisions of any code adopted and incorporated by reference by this Code may be deemed a fire hazard by the Fire Code Official and acted upon pursuant to the public nuisance abatement provisions of Chapter 5 of Division 3 of Title 2 of the San Bernardino County Code beginning with Section 23.0503.

49. Board of Appeals – Code Application and Interpretations.

(a) In order to hear and decide appeals of orders, decisions or determinations made by the Fire Code Official relative to the application and interpretation of this Code (except for administrative citations issued pursuant to Sections 41, 42, 43, and 44), there shall be two appeals boards, namely the Planning Commission and the Building and Safety Board of Appeal.

(b) **Limitations on Authority.** An application for appeal shall be based on a claim that the intent of this Code or the rules, standards and interpretations adopted hereunder have been incorrectly interpreted, the provisions of this Code do not fully

apply, or an equivalent method of protection or safety is proposed. The board shall have no authority to waive requirements of this Code.

(c) **Qualifications.** The board of appeals shall consist of members who are qualified by experience and training to pass judgment on matters pertaining to hazards of fire, explosion, hazardous conditions or fire protection systems and are not employees of the Fire Code Official.

(d) **Appeals Hearings.** Appeals concerning standards of building construction, electrical work, and all fire protection and detection systems shall be heard by the Building and Safety Board of Appeal. All other appeals shall be heard by the Planning Commission. Hearings shall be in accordance with this section.

(e) **Request for Hearing.** Any person may appeal the Department's interpretation regarding the provisions of the San Bernardino County Fire Protection District Fire Code within 15 days after the date such interpretation is rendered, or after enforcement begins. Unless an imminent hazard to life or property exists, enforcement involving an appealed interpretation may be suspended until a decision regarding the appeal has been reached.

(f) **Hearing Procedures.** Within 30 days of the acceptance of an application for an appeal, the County or City having jurisdiction shall set the matter for hearing and shall give notice to the appellant, the applicant and to any other party who has requested in writing to be so notified. During the hearing, witnesses may be sworn in and examined and evidence produced, and parties may be represented by counsel. The appropriate appeals board shall keep a record of the proceedings of each hearing and shall issue written findings and a decision within 15 days of the conclusion of the hearing. A written copy of the decision shall be mailed to the parties by first class mail, at such addresses as they have provided.

(g) **Fees and Costs.** The Department shall act as staff to the Appeals Board, and for that purpose may determine and set fees to charge an appellant to cover the cost of preparation of the record for appeal. A summary of costs shall be compiled and

sent to the appellant after all the appeals proceedings have been completed. Any refund due the appellant shall be returned within 60 days after the summary is sent.

50. Cost Recovery.

Pursuant to California Health & Safety Code sections 11374.5(b)(1), 13009 et seq., 13916(a), 25259.4, 25514, 25515(a), 25540(a), 25541(a), California Government Code sections 53150, 53151, 53152, 53159(a) & (b), California Vehicle Code section 23112.7, and all other provisions of law, all costs incurred by the San Bernardino County Fire Protection District for the inspection and enforcement of any provision of this Code, the investigation of any fire, explosion or other hazardous condition, the suppression of fire, the response to a traffic collision or accident, the containment and/or mitigation of a hazardous materials release, and any rescue or rendering of medical or physical aid or assistance, may be charged to any responsible party, any person who violates this Code or any person who, due to a negligent or unlawful act or omission, is responsible for or requires or causes the emergency response of this Department pursuant to a schedule of fees adopted by the District. Any expense incurred by this District for such an emergency response shall constitute a debt of such person and shall be collectible by the District in the same manner as in the case of an obligation under contract, express or implied.

51. Treble Damages.

Upon a second or subsequent civil or criminal judgment for a violation of this Code within a two-year period the violator shall be liable to the District for treble the abatement costs.

SECTION 2. This ordinance shall take effect 30 days from the date of adoption.

Janice Rutherford

JANICE RUTHERFORD, Chair
Board of Directors

SIGNED AND CERTIFIED THAT A COPY
OF THIS DOCUMENT HAS BEEN DELIVERED
TO THE CHAIR OF THE BOARD OF DIRECTORS

LAURA H. WELCH, Secretary
to the Board of Directors

STATE OF CALIFORNIA)
) ss.
COUNTY OF SAN BERNARDINO)

I, LAURA H. WELCH, Secretary of the Board of Directors of the San Bernardino County Fire Protection District, State of California, hereby certify that at a regular meeting of the Board of Directors of the San Bernardino County Fire Protection District, held on the 8th day of July, 2014, at which meeting were present Supervisors: Lovingood, Rutherford, Ramos, Ovitt, Gonzales, and the Secretary, the foregoing ordinance was passed and adopted by the following vote, to wit:

AYES: DIRECTORS: Lovingood, Rutherford, Ramos, Ovitt, Gonzales
NOES: DIRECTORS: None
ABSENT: DIRECTORS: None

IN WITNESS WHEREOF, I have hereunto set my hand and affixed the official seal of the Board of Directors this 8th day of July, 2014

LAURA H. WELCH, Secretary to the Board of Directors of the San Bernardino County Fire Protection District

Deputy

Approved as to Form:
JEAN-RENE BASLE, County Counsel

By:
KENNETH C. HARDY
Deputy County Counsel

Date: 4/14/14

SAN BERNARDINO COUNTY FIRE DEPARTMENT
COMMUNITY SAFETY DIVISION

620 South 'E' Street
San Bernardino, CA 92415-0179
(909) 386-8400

Standard Number
A-2

FIRE PREVENTION STANDARD

FIRE APPARATUS ACCESS ROAD DESIGN, CONSTRUCTION AND MAINTENANCE

AUTHORITY

Sections 102.9 of the 2013 California Fire Code and Sections 4 and 8 of the San Bernardino County Fire Protection District Fire Code Ordinance state that the fire code official of the San Bernardino County Fire Department shall have the authority to adopt policies, procedures, rules, and regulations in order to clarify the application of the Fire Code and to determine requirements not specifically provided for by the Fire Code. For further requirements on this subject, see sections 503.1 and 503.2 et. seq. of the 2013 California Fire Code.

PURPOSE

The purpose of this standard is to provide for roadways that allow for safe, quick and reliable access by emergency response fire apparatus onto premises to be protected.

SCOPE

This standard shall apply to the design, construction and maintenance of all new fire apparatus access roads within the jurisdiction, as well as fire apparatus access roads at existing facilities when applied at the discretion of the fire code official.

DISCLAIMER

These standards may change without notice. Whenever applicable statutes, regulations and standards are updated and adopted, the latest shall apply. Please contact the Community Safety Division at (909) 386-8400 to determine if these standards have changed.

These requirements do not exempt any individual from complying with other applicable state, county, or city codes and standards.

SUBMITTALS

The applicant shall provide on a scaled site plan or plot plan the following information at a minimum:

1) Location of all fire apparatus access roads and fire apparatus turnarounds for dead end roadways
2) Dimensions indicating width, length, and radii of all turns for all fire access roads
3) Surfacing specifications of fire access roads, including pavement type and thickness. May also require a report from a registered engineer for certain conditions.
4) Gradient, camber (cross slope) and crown of all roadways used for fire access, indicated in percentage at regular intervals (can be submitted on a grading plan and with topographic lines)
5) Locations of any types of obstructions to fire access roads (See also SBCFD standard A-3)
6) The locations of all temporary and permanent structures, outside storage yards.
7) Location of all fire protection water sources (hydrants, tanks, etc.).
8) Locations of all parking areas, landscaping areas, walkways, and any other adjacent areas
9) Location of significant hazards (i.e., flammable or combustible liquids, hazardous materials, or LPG tanks).

SAN BERNARDINO COUNTY FIRE DEPARTMENT
COMMUNITY SAFETY DIVISION

620 South 'E' Street
San Bernardino, CA 92415-0179
(909) 386-8400

Standard Number
A-2

FIRE PREVENTION STANDARD

FIRE APPARATUS ACCESS ROAD DESIGN, CONSTRUCTION AND MAINTENANCE

DEFINITIONS

EMERGENCY VEHICLE ACCESS (EVA) - A road or other passageway developed to allow the passage of fire apparatus. An emergency vehicle access is not necessarily intended for vehicular traffic other than fire apparatus.

FIRE APPARATUS ACCESS ROAD - A road that provides fire apparatus access from a fire station to a facility, building or structure or portion thereof. This is a general term inclusive of all other terms such as fire lane, public street, private street, parking lot drive aisle or access roadway.

GENERAL

1) All access roads shall meet minimum fire department access road requirements, including width, distance, turnarounds and height limitations or as approved by the fire code official.
2) Fire apparatus access roads shall be provided to within one hundred and fifty (150) feet of all exterior portions of the first story of every building, facility or structure as measured by an approved route around the exterior of the building or structure.
3) For the purposes of determining adequate fire access as discussed above, "approved route" is the distance measured along a path that simulates the route a firefighter may take to extend a hose line around the exterior of a structure from a fire engine parked on the nearest fire apparatus access road. This is measured at a point located ten (10) feet from the edge of the roadway or curb. Under most circumstances, the approved route will not be a straight line. Fences, planters, other structures, topography and any significant changes in elevation must be considered when determining whether a building or structure is accessible from a particular location on the fire access roadway. **(See Diagram A-2.1)**

NUMBER REQUIRED

1) For new residential development, additional points of access will be determined by the number of existing or future dwelling units that the roadway will provide fire access to, as well as by measuring the length of the roadway.
   a) For single family uses, a minimum of two points of access, meeting the requirements of the County or City Engineering department for unrestricted motor vehicle access as well as the requirements of this standard, are required when serving more than thirty (30) dwelling units. For multiple family uses, two or more separate points of access are required when serving more than one hundred (100) dwelling units.
2) In all commercial and industrial development, a minimum of two or more separate points of fire access into a site or premises, which meet the requirements of the County or City Engineering Department for unrestricted motor vehicle access as well as all the other requirements of this standard, shall be provided whenever fire apparatus access roadways are required onsite. **(See Diagram A-2.3)**
   a) For development projects that are constrained with practical difficulties in providing two points of fire access as described above, one point of fire access for emergency ingress and egress shall be allowed at the discretion of the fire code official if it is unobstructed with no gates or other barriers, provides a minimum of thirty five (35) feet in width, and provides access to

buildings or structures totaling no more than sixty two thousand (62,000) square feet and no more than thirty (30) feet or three (3) stories in height.

b) When a secondary point of fire access into a development is required, it may be permitted to be an Emergency Vehicle Access (EVA) with the approval of the fire code official. The EVA shall be secured with a gate or other barrier acceptable to the fire code official (See SBCFD Standard A-3.)

3) In all cases, to be considered a separate point of fire access, such access shall be located at least one half (1/2) of the diagonal distance of the development area served, apart from another point of fire access.

4) The fire code official is authorized to require more than two means of fire access based on the potential for impairment of roadways by vehicle congestion, condition of terrain, climatic conditions or other factors that could limit access. For example, certain uses or areas may require additional provisions for egress of a large number of the public during major disasters.

LOCATION

1) In all development except single family residential, where required, fire apparatus access roadways shall be provided on at least one (1) side of every building or structure, which shall be the side with the greatest length. The access road shall run parallel to the entire length of the building. The roadway shall not be closer than ten (10) feet or farther than thirty (30) feet from the building, as measured from the face of curb or edge of the access roadway to the exterior wall or projection of the building or structure. **(See Diagram A-2.4)**

2) In addition, fire access roadways shall be located as per the following:

a) Buildings less than 50,000 square feet and greater than 100 feet in depth shall be provided with fire access roadways on two (2) sides, one of which shall be on the longest side.

b) Buildings that are 50,000 square feet or larger shall have fire access roadways provided on three (3) sides, two (2) of which will be on the longest sides.

c) Buildings which exceed 100,000 square feet shall have fire access roadways provided on all sides.

d) Buildings that are four (4) or more stories in height shall have fire access roadways provided on all sides. **(See Diagram A-2.4)**

DIMENSIONS

1) Fire apparatus access roadways shall be measured from the face of a vertical curb, the edge of the roadway pavement, or flow line of a rolled curb, or the exterior wall or projection of a building **(See Diagram A-2.5)**

2) Fire apparatus access roadways serving all buildings, structures or facilities shall be a minimum of twenty-six feet (26') in unobstructed width. See (a) through (c) below for exceptions.

a) Residential driveways that provide fire access to not more than two (2) single family dwellings and accessory structures shall be a minimum of twelve (12) feet in width.

b) Fire apparatus access roadways serving buildings that are three (3) stories or more in height or more than 300,000 square feet in area shall be a minimum of thirty (30') feet in unobstructed width.

c) When approved by the fire code official, in Mountain Region areas as designated by the County or where topographical constraints exist, fire apparatus access roads that are less than the minimum width, but no less than twenty (20) feet in width, shall be permitted. Such roadways shall have turnouts that are a minimum of six feet (6') in width and fifty (50') feet in length and spaced at approximately every six hundred (600') feet. If fire hydrants are located on access roads, the turn-out shall be located at each fire hydrants and other points determined necessary for fire protection and emergency response.**(See Diagram A-2.8)**

d) One-way fire access roadways and roadways that have raised medians shall have an unobstructed one-way width of twenty (20) feet. Such medians shall be a maximum of fifty (50) feet in width except where approved by the fire code official. Roadways with raised medians shall have intersections or median breaks located a maximum of six hundred (600) feet apart or as recommended by the County or City Engineering Department. **(See Diagram A-2.7)**

3) All fire access roadways shall be no less than fourteen (14) feet six (6) inches in unobstructed vertical clearance, as measured from roadway surface at its the highest elevation to the lowest point of any obstruction.

4) All dead-end fire access roadways that exceed one hundred fifty (150') feet in length shall be provided with a turn-around in accordance with the "TURNAROUNDS" section of this Standard. The length of a roadway for the purposes of this standard shall be measured from (A) the center line of the intersecting roadway that provides at least two points of access to (B) the center point of the dead-end roadway terminus, such as a cul-de-sac or other turnaround. **(See Diagram A-2.2.)**

The maximum length of dead end fire access roadways shall be:

a) Six hundred (600) feet in length in all residential and commercial development

b) One thousand (1000) feet in length in industrial development

c) Three hundred fifty (350) feet in length for development within a Fire Safety Overlay District as defined by the County Development Code

5.) Parking of vehicles shall not be allowed to obstruct fire department access at any time. The following criteria shall be used to determine parking allowed on fire access roadways:

a) Parking is not permitted on roadways that are less than thirty two (32) feet in width.

b) Roadways that are a minimum of thirty two (32) feet in width but less than forty (40) feet in width may have parallel parking on one (1) side of the roadway in accordance with County or City standards.

c) Roadways that are a minimum of forty (40) feet in width may be designated to have parallel parking on both sides of the roadway. For higher density development, public or private streets that are a minimum of thirty six (36) feet in width may be allowed to have parking on

both sides of the street with the approval of the fire code official, taking into consideration additional access provisions and other factors.

d) In addition, parking that is perpendicular or diagonal to the edge of the roadway shall not obstruct the required minimum width of 26 feet for fire access. **(See Diagram A-2.6)**

SURFACE

1) All fire access roadway surfaces, except for driveways providing fire access to no more than two (2) single family dwellings or accessory structures, shall be capable of supporting a fire apparatus with a gross vehicle weight of 80,000 pounds (lbs.) For design purposes, fire apparatus weight is distributed as 60,000 lbs. on the rear dual axles and 20,000 lbs. on the front axle. When required by the fire code official, the design of fire access roadways shall bear the stamp of a registered professional engineer in order to verify that they meet this requirement.

2) Fire access roadways shall be paved with a concrete or asphalt material in order to provide "all weather" safe driving conditions. The appropriate thickness of surface materials and base materials shall be determined by a qualified engineer and subject to the approval of the County or City Engineering Department, but shall be in all cases a minimum of four (4) inches.

3) Planted materials that are retained by a solid system such as "Turf Block,"® or "Grass-crete"® may be used for fire apparatus access surfacing, with approval of the fire code official, for limited or isolated areas no more than fifty (50) feet in length and where road grades do not exceed two percent (2%). Such areas shall be clearly signed as Emergency Vehicle Access per SBCFD Standard A-3, Diagram A-3.1. These, as well as other alternate paving materials such as stone, concrete pavers, chip seal or slag, shall be evaluated based on their ability to support imposed load of a fire apparatus and shall be immediately recognizable to emergency responders as a drivable surface.

4) Where no paved roadways exist and road grades do not exceed eight percent (8%), and where serving only single family dwellings or accessory buildings, roads may be constructed with approved native materials or gravel compacted to eighty five percent (85%) compaction.

GRADIENT

1) Generally, the grade of a fire apparatus access road shall be a maximum of twelve percent (12%) at any point.

2) Fire apparatus access roadways or driveways may be increased to fourteen percent (14%) for a distance not to exceed 500 feet with the approval of the fire code official.

3) The grade of a driveway providing fire access to one (1) or two (2) single family dwellings may be increased to a maximum of sixteen percent (16%) for a distance not to exceed 500 feet in areas in which County or City Development Codes allow such increases and with the approval of the fire code official.

4) Grades across the width of a road section or within a turnaround area as described below shall not exceed five percent (5 %.)

5) In order to accommodate proper angles of approach and departure, gradient in fire access roads

shall not exceed a five percent (5%) change along any ten (10) foot section.**(See Diagram A-2.9)**

TURNING RADIUS

1) All turns within fire access roadways that accommodate two-way traffic of fire apparatus shall be a minimum of nineteen feet (19') inside radius and forty five feet (45') outside radius. **(See Diagram A-2.10.)**
2) For fire access roadways that accommodate one-way traffic of fire apparatus, as well roadways that have limited traffic such as onsite drive aisles shall be a minimum of nineteen feet (19') inside radius and thirty two feet (32') outside radius. **(See Diagram A-2.10)**
3) Subject to the approval of the fire code official, a computer model fire apparatus turning template, set to the dimensions of a typical fire apparatus, can be used for determining the appropriate radius.
4) A minimum fifty (50) foot straight section of roadway must be provided between radius turns within fire access roadways, measured from the end of one radius turn to the beginning of the next. **(See Diagram A-2.11)** A turning template may also be used to modify this requirement.

TURNAROUNDS

1) An approved fire apparatus turnaround in accordance with this section is required when fire access roadways exceed one hundred fifty (150) feet in length.
2) Driveways, alleys, and other private roadways that are not intended for public access may provide a "hammerhead" style turnaround complying with **Diagram A-2.12**.
3) Public and private streets that are intended for public access shall terminate in an approved cul-de-sac with a minimum radius of forty five (45) feet. When allowed by the County or City Engineering Department for higher density development, cul-de-sacs that are a minimum of thirty eight (38) feet in radius may be allowed with the approval of the fire code official, taking into consideration potential for parking and other factors. **(See Diagram A-2.13)**

INSTALLATION

1) All fire access roadways required by the Fire Code and this standard shall be installed to an extent that will provide all-weather paved access for emergency vehicles prior to combustibles being brought to the site or combustible construction taking place. The fire code official shall determine the adequacy of fire access roads during construction; see also SBCFD Standard B-2.
2) All secondary points of fire access, including those that are EVA only, shall be installed prior to the first phase or the beginning of combustible construction. Subject to the approval of the fire code official, additional points of access may be installed during later phases of construction, provided all other requirements of this Standard are met and all access roads and points of access are installed prior to final for occupancy.
3) Prior to final approval for any development project, fire access roadways shall be complete with final lifts of asphalt, curbs and gutters, fire hydrant markers in accordance with SBCFD standard W-2, and approved signage and striping in accordance with SBCFD Standard A-1.

SAN BERNARDINO COUNTY FIRE DEPARTMENT
COMMUNITY SAFETY DIVISION

620 South 'E' Street
San Bernardino, CA 92415-0179
(909) 386-8400

Standard Number
A-2

FIRE PREVENTION STANDARD

FIRE APPARATUS ACCESS ROAD DESIGN, CONSTRUCTION AND MAINTENANCE

TEMPORARY FIRE ACCESS ROADS

1) When approved by the fire code official, temporary access roads that meet all applicable requirements of SBCFD Standards may be installed during construction in lieu of permanent access roadways and maintained in place for a maximum period of one (1) year.
2) Temporary fire access roads shall be designed by a registered professional engineer and drawn on plans and submitted to the Fire Department in accordance with this Standard. Such roadways may be designed and constructed of any materials that will provide safe, all-weather drivable surface, provided these are evaluated by the design engineer and meet all applicable requirements of this Standard.
3) See SBCFD Standard B-2 for maintenance of temporary access roads.

MAINTENANCE

1) All fire apparatus access roads, private or public, shall be maintained unobstructed and in safe, drivable condition for emergency vehicle access at all times by the property owner or other responsible party.
2) In areas subject to snowfall, all roadways used for fire access shall be cleared of snow and repaired on a continual basis.
3) Landscaping and any other vegetation shall be maintained and cleared horizontally from the edges and extending vertically to fourteen (14) feet, six (6) inches in height for all fire access roads. Landscaping placed in decorative medians or near buildings shall not be obstructive to fire equipment. Consideration should be given as to the size of mature growth, for each species, so plants will not impede firefighting operations or access.
4) All roadways as well as cul-de-sacs and other required turnarounds shall be free of obstructions, including storage or the parking of vehicles.

FIREFIGHTER ACCESS TO BUILDINGS

1) Fences, walls, landscaped areas, or other obstructions that may inhibit firefighters from extending hose lines from a fire apparatus parked on a fire access roadway to any building shall have minimum four foot (4'-0") gates or openings provided, at locations acceptable to the fire code official.
2) A minimum four foot (4'-0") paved pathway shall be provided from fire access roadways to all fire access doors as required for high piled storage uses per the California Fire Code.

FIRE ACCESS ROADS WITHIN STATE RESPONSIBITY AREAS AND STATE PROJECTS

1) Where not legally enforceable within State regulated development projects and existing facilities, the requirements in this Standard are strongly recommended within San Bernardino County Fire Department's jurisdiction.

SAN BERNARDINO COUNTY FIRE DEPARTMENT
COMMUNITY SAFETY DIVISION

620 South 'E' Street
San Bernardino, CA 92415-0179
(909) 386-8400

Standard Number
A-2

FIRE PREVENTION STANDARD

FIRE APPARATUS ACCESS ROAD DESIGN, CONSTRUCTION AND MAINTENANCE

DIAGRAM A.2-1: ROUTE OF TRAVEL AROUND BUILDINGS

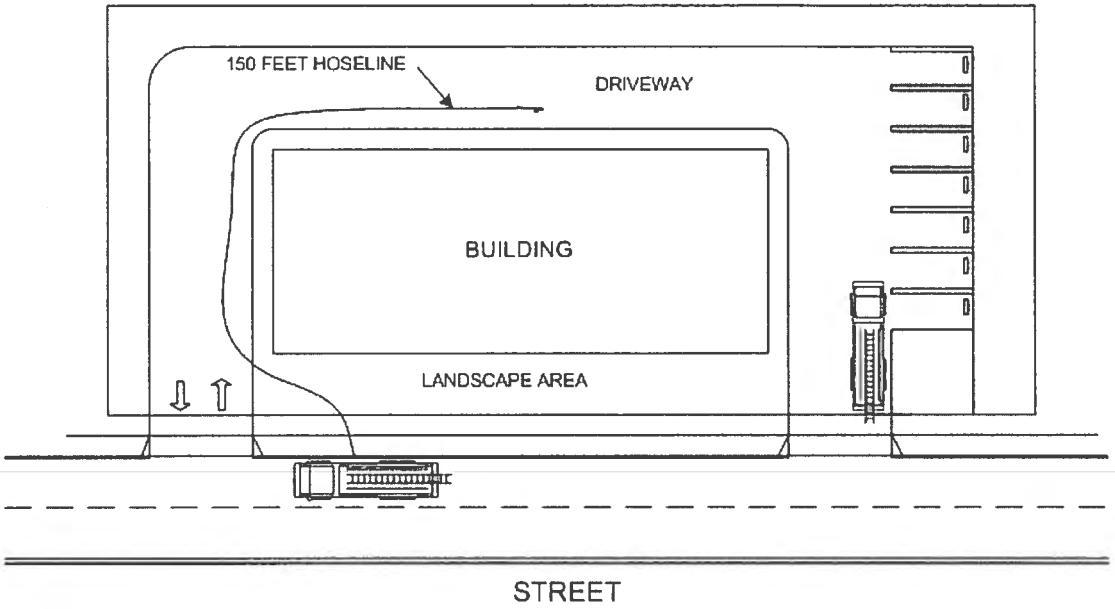

DIAGRAM A.2-2: METHOD OF MEASURING CUL-DE SAC LENGTH

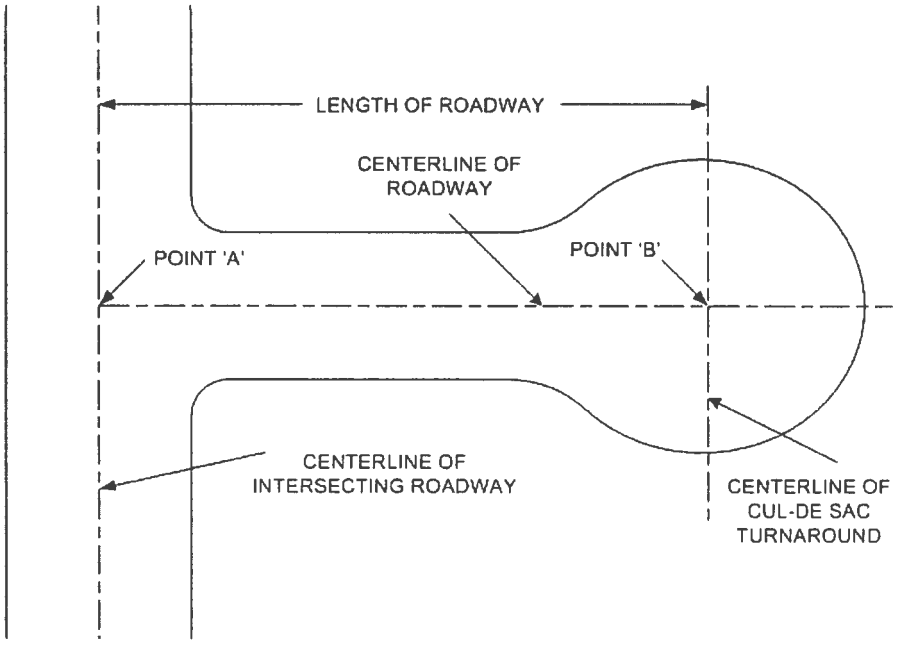

FIRE PREVENTION STANDARD

FIRE APPARATUS ACCESS ROAD DESIGN, CONSTRUCTION AND MAINTENANCE

DIAGRAM A.2-3: MULTIPLE POINTS OF ACCESS

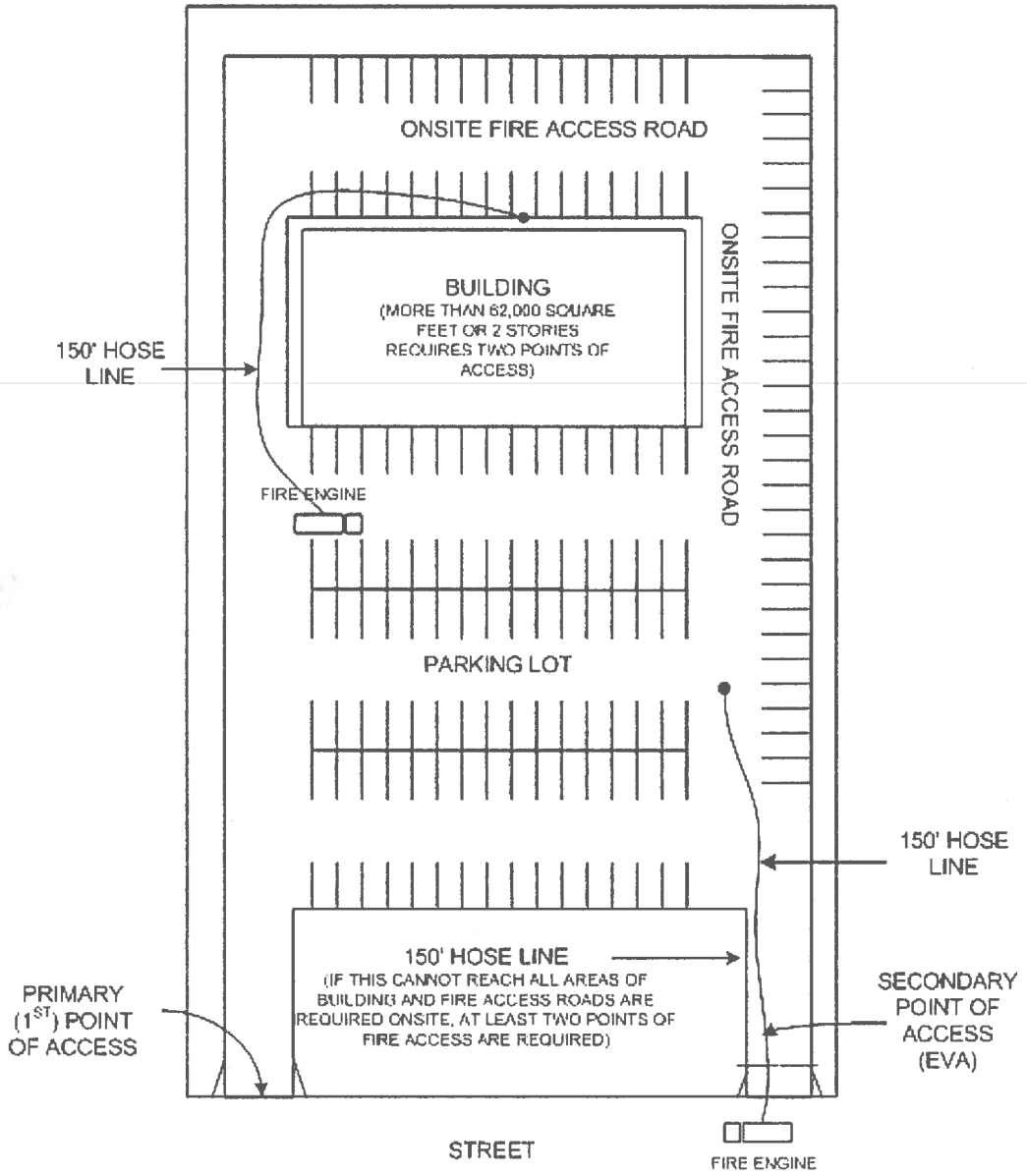

SAN BERNARDINO COUNTY FIRE DEPARTMENT
COMMUNITY SAFETY DIVISION

620 South 'E' Street
San Bernardino, CA 92415-0179
(909) 386-8400

Standard Number
A-2

FIRE PREVENTION STANDARD

FIRE APPARATUS ACCESS ROAD DESIGN, CONSTRUCTION AND MAINTENANCE

DIAGRAM A.2-4: SIDES OF BUILDING ACCESS

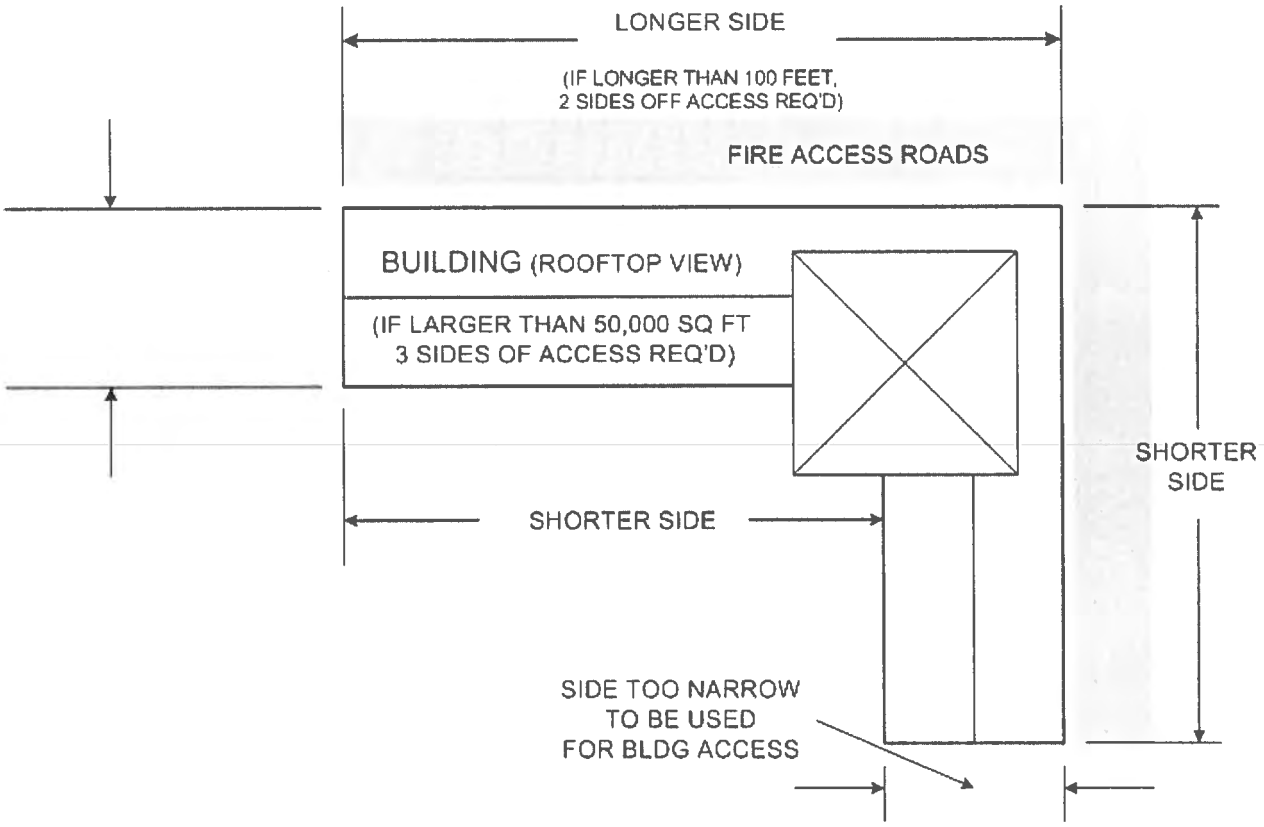

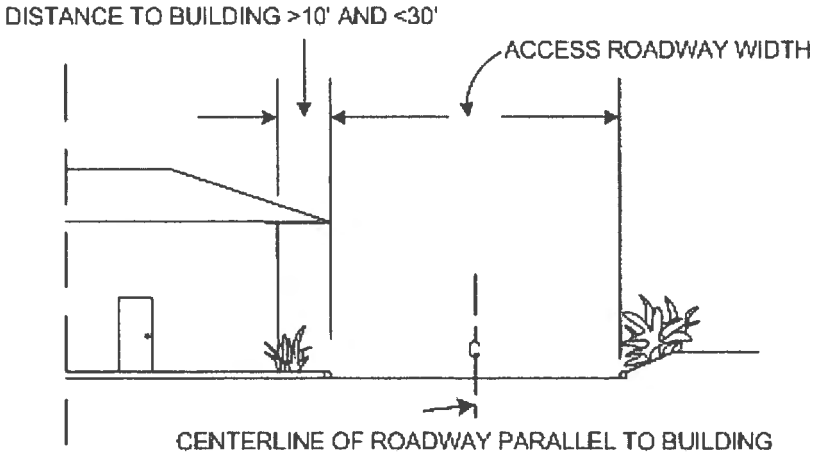

SAN BERNARDINO COUNTY FIRE DEPARTMENT
COMMUNITY SAFETY DIVISION

620 South 'E' Street
San Bernardino, CA 92415-0179
(909) 386-8400

Standard Number
A-2

FIRE PREVENTION STANDARD

FIRE APPARATUS ACCESS ROAD DESIGN, CONSTRUCTION AND MAINTENANCE

DIAGRAM A.2-5: ROADWAY MEASUREMENT DETAIL

CURBED ROAD

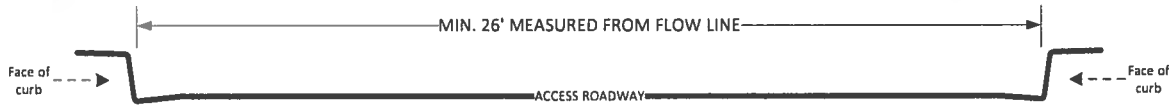

FLAT ROAD

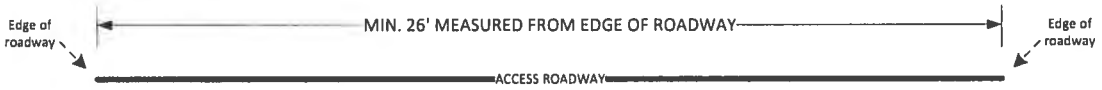

ROLLED CURB

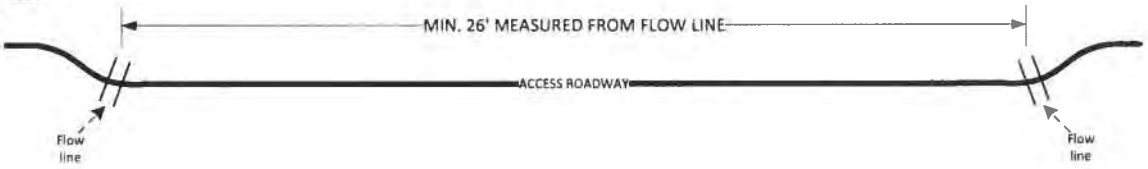

EDGE OF BUILDING OR PROJECTION

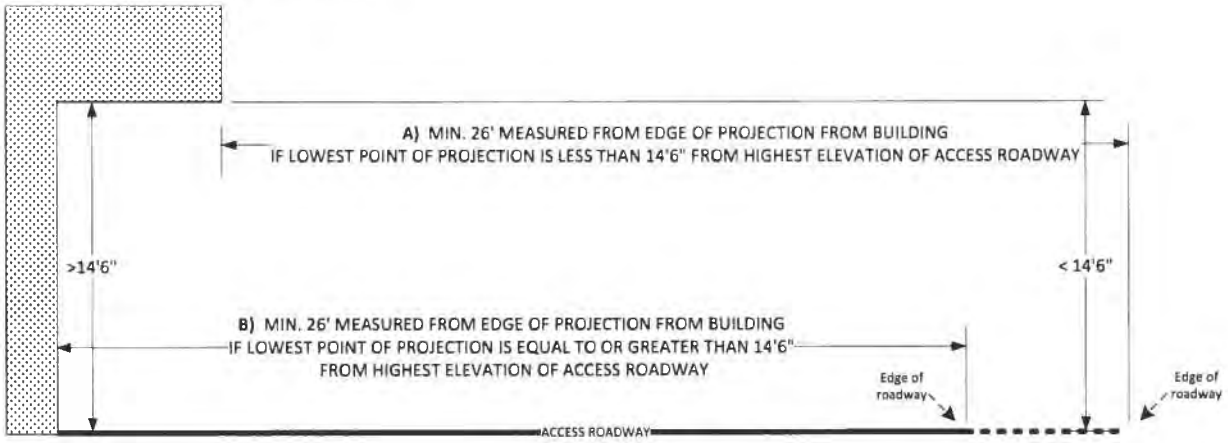

FIRE PREVENTION STANDARD

FIRE APPARATUS ACCESS ROAD DESIGN, CONSTRUCTION AND MAINTENANCE

DIAGRAM A.2-6: PARKING ON FIRE ACCESS ROADWAYS

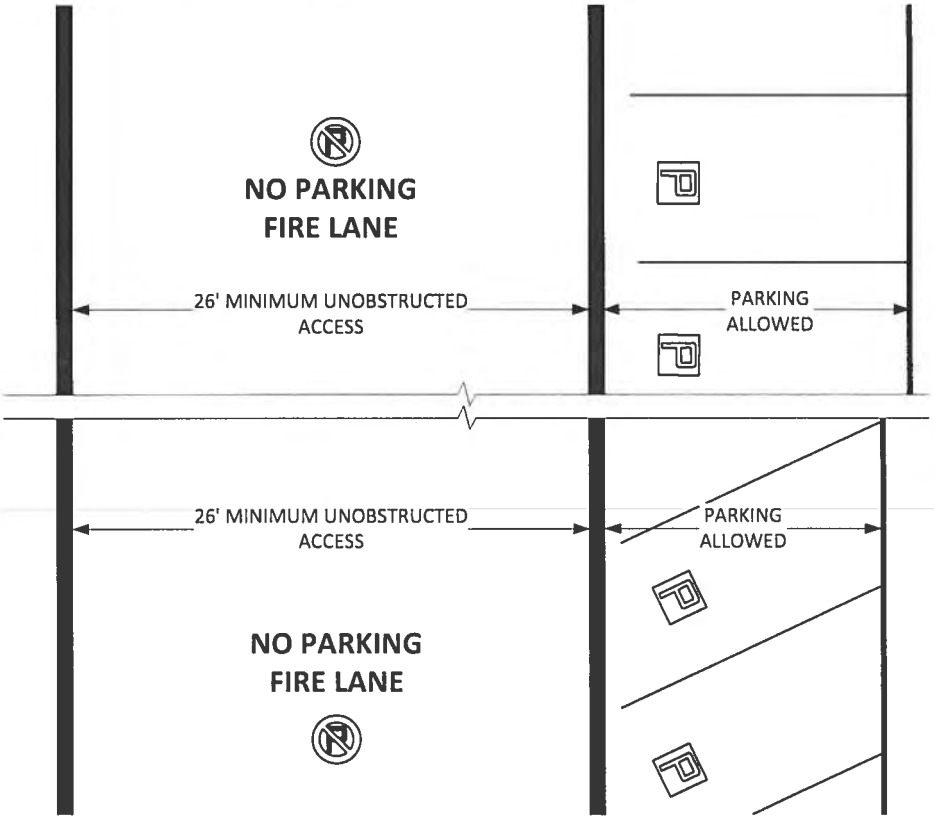

DIAGRAM A.2-7: ROADWAY MEDIAN BREAKS

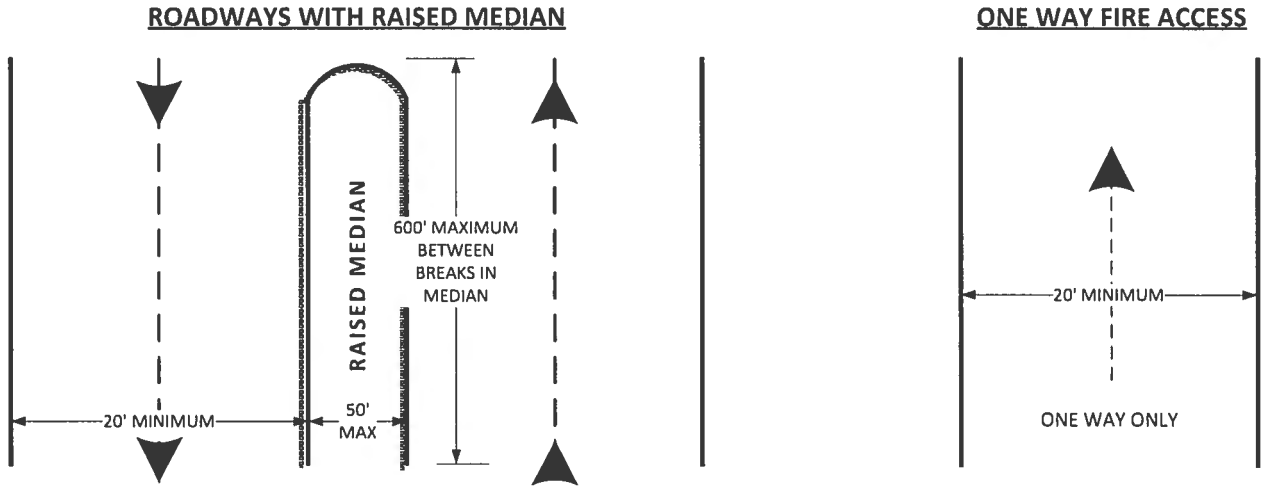

FIRE PREVENTION STANDARD

FIRE APPARATUS ACCESS ROAD DESIGN, CONSTRUCTION AND MAINTENANCE

DIAGRAM A.2-8: ROADWAY TURNOUT DETAILS

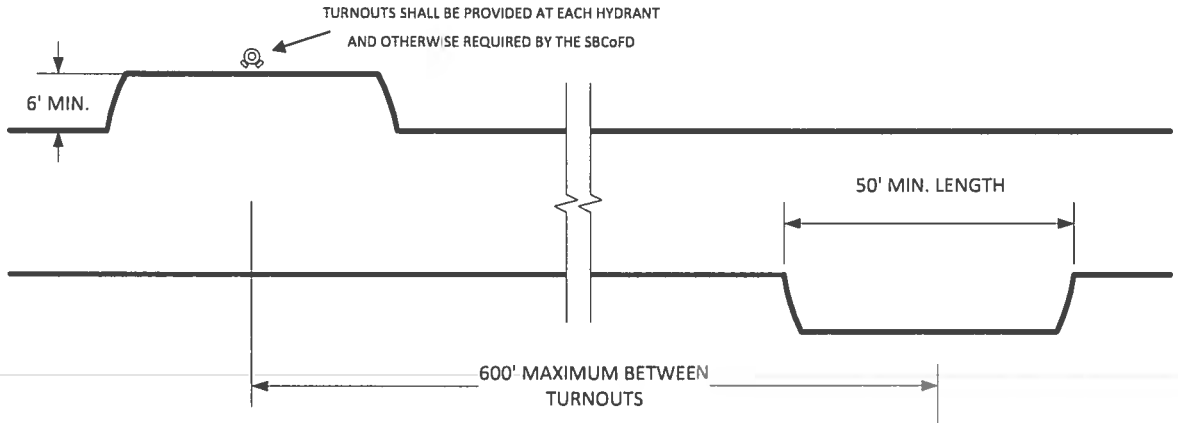

DIAGRAM A.2-9: ROADWAY GRADE DETAIL

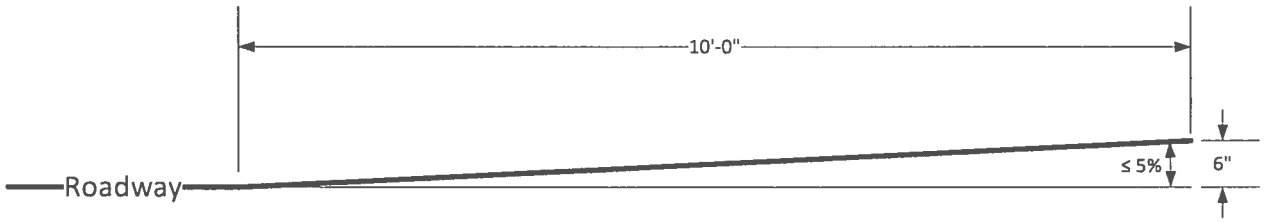

FIRE PREVENTION STANDARD

FIRE APPARATUS ACCESS ROAD DESIGN, CONSTRUCTION AND MAINTENANCE

DIAGRAM A.2-10: TURNING RADIUS DETAIL

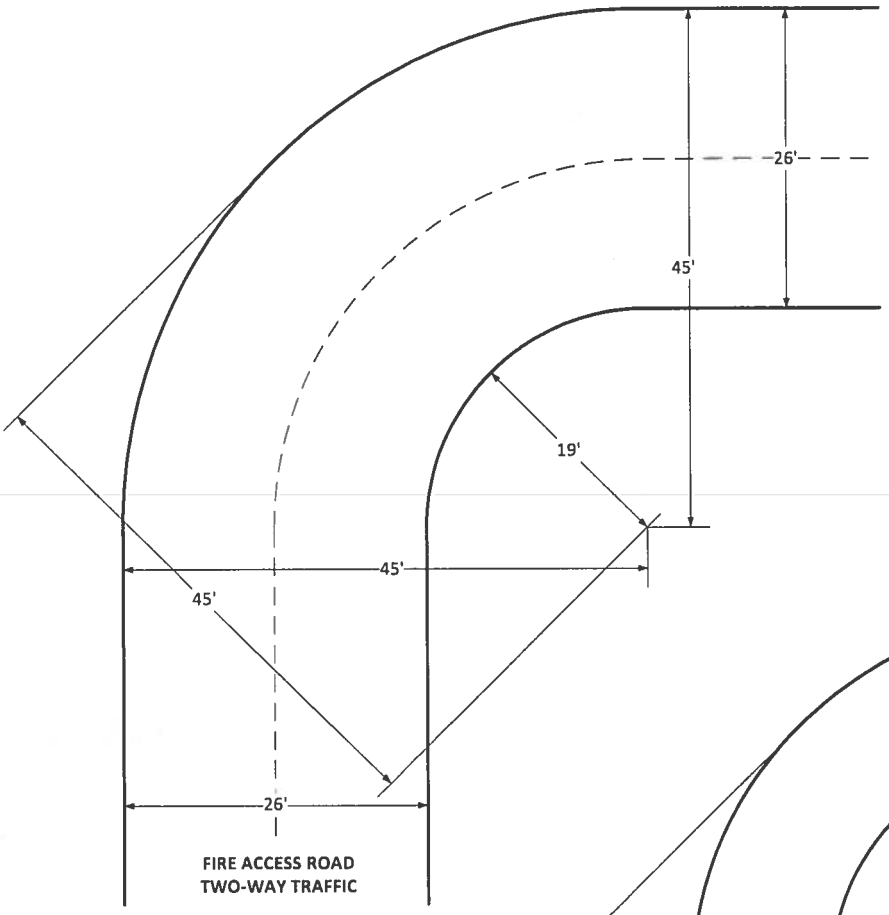

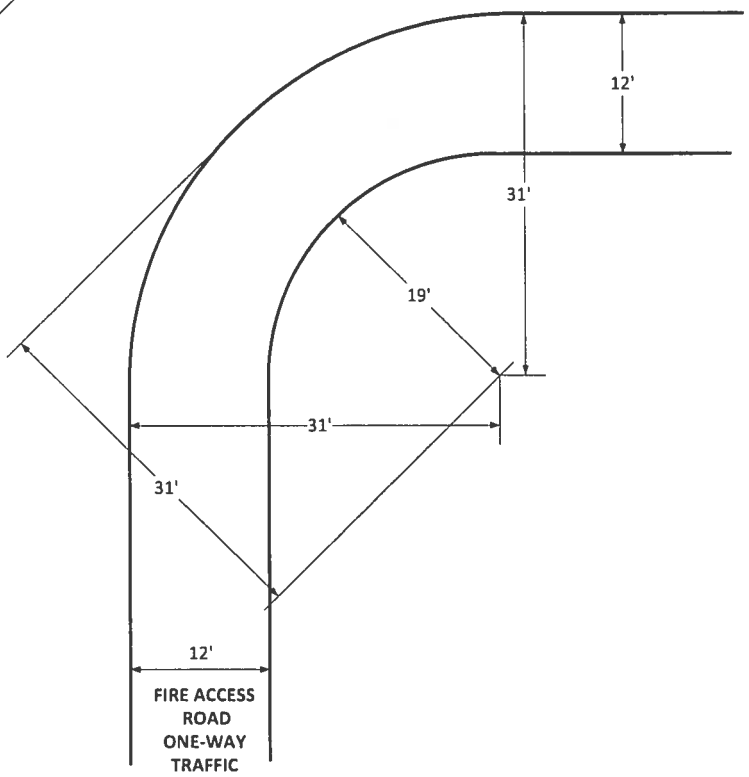

FIRE PREVENTION STANDARD

FIRE APPARATUS ACCESS ROAD DESIGN, CONSTRUCTION AND MAINTENANCE

DIAGRAM A.2-11: ROADWAY CURVES

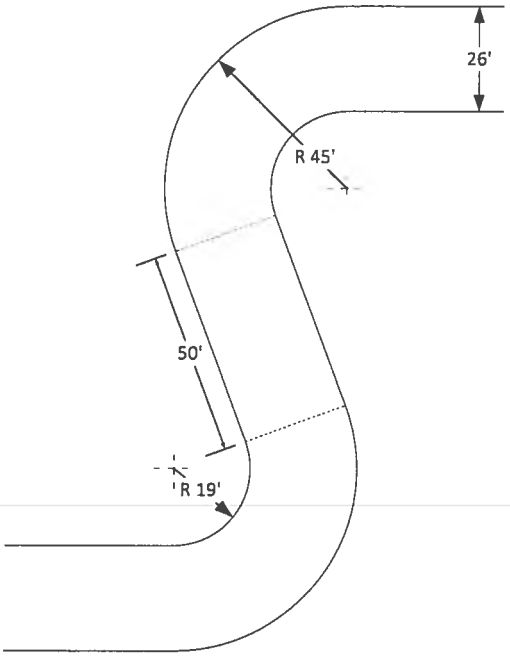

DIAGRAM A.2-12: HAMMERHEAD TURNAROUND DETAIL

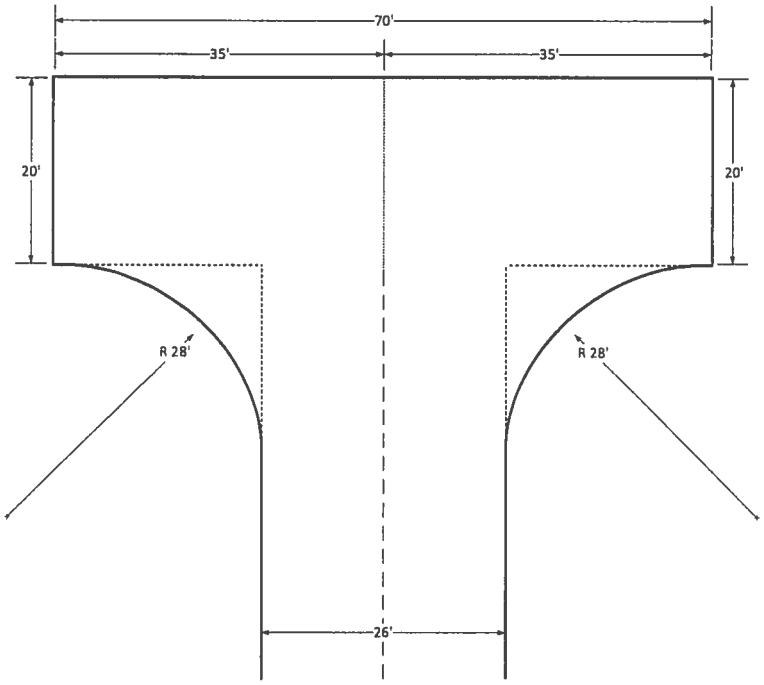

SAN BERNARDINO COUNTY FIRE DEPARTMENT
COMMUNITY SAFETY DIVISION

620 South 'E' Street
San Bernardino, CA 92415-0179
(909) 386-8400

Standard Number
A-2

FIRE PREVENTION STANDARD

FIRE APPARATUS ACCESS ROAD DESIGN, CONSTRUCTION AND MAINTENANCE

DIAGRAM A.2-13: CUL-DE-SAC TURNAROUND DETAIL

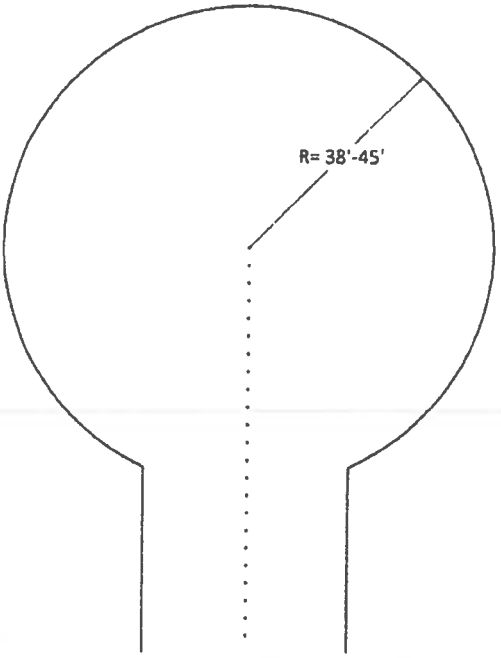

APPROVED BY:

Michael Horton, Fire Marshal — Date: 8-5-15

Mark Hartwig, Fire Chief — Date: 8-6-2015

SAN BERNARDINO COUNTY FIRE DEPARTMENT
COMMUNITY SAFETY DIVISION

620 South 'E' Street
San Bernardino, CA 92415-0179
(909) 386-8400

Standard Number
A-3

FIRE PREVENTION STANDARD

GATES AND OTHER OBSTRUCTIONS TO FIRE DEPARTMENT ACCESS

AUTHORITY

Sections 102.9 of the 2013 California Fire Code and Sections 4 and 8 of the San Bernardino County Fire Protection District Fire Code Ordinance provide that the fire code official of the San Bernardino County Fire Department shall have the authority to adopt policies, procedures, rules, and regulations in order to clarify the application of the Fire Code and to specify requirements not specifically provided for by the Fire Code. For further requirements on this subject, see sections 503.4, 503.5, and 503.6 et. seq. of the 2013 California Fire Code.

PURPOSE

The purpose of this standard is to provide guidance for the approved methods of installation and maintenance of gates and other obstructions to fire department access.

SCOPE

This standard shall apply to all obstructions, access control devices, traffic calming devices, or other similar systems within any roadways that serve as fire access in all new or existing residential, commercial, and industrial development. This standard does not apply to obstructions within parking aisles that do not serve as fire apparatus access roads.

DISCLAIMER

These standards may change without notice. Whenever applicable statutes, regulations and standards are updated and adopted, the latest shall apply. Please contact the Community Safety Division at (909) 386-8400 to determine if these standards have changed.

These requirements do not exempt any individual from complying with other applicable state, county, or city codes and standards.

SUBMITTALS

Detailed plans shall be submitted to the Fire Department for approval and permit prior to the installation of any obstructions, security gates or other vehicle access control device or system. The plans shall contain at a minimum the following information:

1) Plot plan showing the locations of all fire department access roads, nearby buildings, fire protection equipment and appliances, means of emergency operation, and location(s) of any proposed gates or other obstructions.
2) Elevations and cross sections of all gates or other obstructions, with dimensions.
3) Details of the installation and manufacturer's specifications sheets for all materials and associated equipment.
4) Proposed signage and/or striping on all fire apparatus access roadways as required by SBCFD Standard A-1.
5) Any other important details and information as required by this Standard.

Once approved for installation, the work shall be inspected by the Fire Department prior to placing the system into operation.

Note: Please see SBCFD Standard A-4 pertaining to Knox ® key switches and key boxes.

SAN BERNARDINO COUNTY FIRE DEPARTMENT
COMMUNITY SAFETY DIVISION

620 South 'E' Street
San Bernardino, CA 92415-0179
(909) 386-8400

Standard Number
A-3

FIRE PREVENTION STANDARD

GATES AND OTHER OBSTRUCTIONS TO FIRE DEPARTMENT ACCESS

DEFINITIONS

EMERGENCY VEHICLE ACCESS (EVA) - A road or other passageway developed to allow the passage of fire apparatus. An emergency vehicle access is not necessarily intended for vehicular traffic other than fire apparatus.

SPEED BUMP - A raised portion of roadway that is out of conformance with the minimum criteria in this Standard and not approved by the Fire Department

SPEED HUMP – A raised portion of roadway that meets the minimum criteria as specified in this Standard as well as that of a City or County Traffic Engineering Department

TRAFFIC CALMING FEATURES – Roadway devices such as bottlenecks, curves, and roundabouts which are designed to slow the speed of traffic

GENERAL

1) All obstructions to fire department access shall be installed so as to provide both emergency ingress and egress. Direction-limiting devices with no override provision, such as fixed tire spikes, shall be prohibited.
2) The total number of obstructions to fire department access or associated systems, through which emergency responders must pass through to reach any address, shall not exceed one unless specifically approved by the fire code official.
3) The placement of gates or obstruction shall not at any time interfere with the use of fire protection equipment; i.e. fire hydrants, fire department connections, fire sprinkler valves etc.
4) All access control devices must be operable to emergency responders with no prior special knowledge, device, or effort.
5) All obstructions to fire department access which require electrical, hydraulic, or pneumatic power or force for normal operation shall automatically retract into an open position ("fail open") when there is a malfunction or power loss, and shall stay secured in an open position until normal operation is restored.

MANUALLY OPERATED SECURITY GATES

1) Access roads designated for Fire Department (EVA) use only may be gated with manually operated gates which are marked with a sign reading "EMERGENCY AND AUTHORIZED VEHICLES ONLY" per **Diagram A-3.1**, with red letters contrasting from their background and visible from all directions of approach, and must meet other applicable requirements of the California Fire Code and San Bernardino County Fire Department Standards.
2) Manual gates shall have a means of emergency operation that allows manual operation by one person. Manually operated gates shall be equipped with an approved "Knox ®" padlock or an equivalent locking system acceptable to the Fire Department.
3) Manual gates shall either slide open horizontally or swing inward in the direction of emergency vehicle ingress to open.

FIRE PREVENTION STANDARD

GATES AND OTHER OBSTRUCTIONS TO FIRE DEPARTMENT ACCESS

5) For development other than single family dwellings, fire apparatus access openings or driveway approaches serving two-way vehicular traffic shall provide a minimum width of twenty (20) feet of clearance fully open. When medians or center dividers are present and openings or approaches serve one-way traffic, a minimum of twelve (12) feet of clearance shall be required when gates are fully open. One way openings or approaches shall be within fifteen (15) feet of each other, and shall meet all the requirements of this Standard.

6) For private driveways serving single family dwellings, gates shall have a minimum clear open width of twelve (12) feet, and shall meet all other applicable requirements of this Standard.

7) Gates that provide emergency access to fuel modification zones or wildland areas shall be a minimum clear open width of fifteen (15) feet of and shall meet all other applicable requirements of this standard.

8) Parking of vehicles shall not obstruct any entrance or the operation of any gate installed per the requirements of this standard. "NO PARKING" signs designed and installed in accordance with San Bernardino County Fire Department Standard A-3 may be required as directed by the fire code official.

9) When required by the fire code official, entry gates shall be installed so as to provide a minimum of forty feet (40') of fire apparatus stacking from the intersecting road. **(See Diagram A-3.2)**

ELECTRICALLY OPERATED SECURITY GATES

1) Electrically operated security gates shall meet all the requirements of the "MANUALLY OPERATED SECURITY GATES" section above and must meet other applicable requirements of the California Fire Code and this section, as well as all other San Bernardino County Fire Department Standards.

2) Electric gates shall be equipped with an emergency preemption device, or an automatic means of opening the gate for emergency access by fire department personnel. The location and type of emergency opening devices shall be approved by the fire code official, and may include Opticom® or equivalent sensors and/or Knox key switches as deemed necessary by the fire code official. **(See Diagram A-3.3)**

3) Any preemption devices on electric gates shall override all normal gate operations and completely open the gate(s). After preemption devices are activated, gates shall be maintained in an open position for a minimum of twenty (20) minutes, after which the gate controller shall automatically reset and close the gate.

4) All electric motors operating security gates that obstruct fire department access roadways or systems shall be listed in accordance with ASTM F2200 and UL 325, and shall reach the fully open position within a total time not to exceed one second for each one foot of obstructed required width.

5) A safety loop that prevents the gate from closing on vehicles going through the gate shall be installed on all electric gates.

6) An automatic exit loop that activates the gate in the direction of egress shall be installed on all electric gates, or an additional preemption device may be installed in the direction of emergency vehicle egress when approved by the fire code official.

7) Electric gates shall be provided a manual release to allow the gate to be operated manually when electrical service is interrupted.

REMOVABLE OR RETRACTABLE BOLLARDS AND BARRICADES

1) Bollards and barricades of any type that are installed across fire apparatus access roads shall be either automatically retractable into an open position or manually removable. The location, type and design of such obstructions shall be approved by the fire code official prior to installation.
2) Bollards or barricades that are automatically retractable shall have an approved means of emergency operation for Fire Department use, installed in a highly visible location.
3) Manually removable bollards or barricades shall not exceed forty pounds (40 lbs.) per bollard or barricade. Any padlocks or other security devices installed on removable bollards or barricades shall be a "break-away" type that can be easily forced open.
4) Bollards and barricades shall be painted with bright colored reflective yellow paint and have reflective decals installed for high visibility during the hours of darkness.

SPEED HUMPS

1) Speed humps installed within fire access roadways shall be designed pursuant to this standard or other recognized equivalent specification; and if installed on public streets, shall be approved by the County or City Engineering Department having jurisdiction. In general, speed humps shall be designed for vehicles with a travel speed of 25 mph, a minimum width of twelve feet (12'), a maximum height of four inches (4") and a minimum taper of 24 inches (24") **(See Diagram A-3.4)**
2) Speed humps shall be spaced no closer than 300 feet apart. Speed humps shall not be placed within five feet (5') of an intersection or driveway, or within twenty feet (20') of a fire hydrant.
3) Warning signs as well as reflective pavement marking shall be required per City or County Standards if speed humps are placed on public streets. Speed humps placed on private property shall have signage and diagonal pavement "hash" markings as shown in **Diagram A-3.5.**
4) Existing, non-conforming speed humps (such as speed bumps) will be subject to removal when deemed by the fire code official as a hazard to emergency response vehicles.

OTHER TRAFFIC CALMING FEATURES

1) Traffic calming features designed to slow the speed of traffic may be utilized subject to approval by the fire code official. At no time will traffic calming devices be allowed to restrict the minimum width or turning radius within a fire department access route.
2) When approved, traffic calming devices shall be constructed and maintained as per appropriate standards. Plans shall be submitted to the Fire Department for review and approval prior to any construction taking place.

MAINTENANCE OF OBSTRUCTIONS

1) In order to ensure proper maintenance, a copy of a maintenance contract for automatic devices and systems is required to be supplied to the Fire Department for review. Regular inspections of equipment, on a minimum of a bi-annual basis, shall be performed and a record kept on file for Fire Department review.

FIRE PREVENTION STANDARD

GATES AND OTHER OBSTRUCTIONS TO FIRE DEPARTMENT ACCESS

2) The property owner and/or property owners association shall be responsible to maintain all equipment. All system components shall be maintained in an operative condition at all times and shall be replaced or repaired when defective.

3) The Fire Department shall have the authority to perform inspections to ensure proper maintenance and integrity of any systems or equipment on an as-needed basis.

DIAGRAM A-3.1 "EMERGENCY VEHICLES ONLY" SIGN

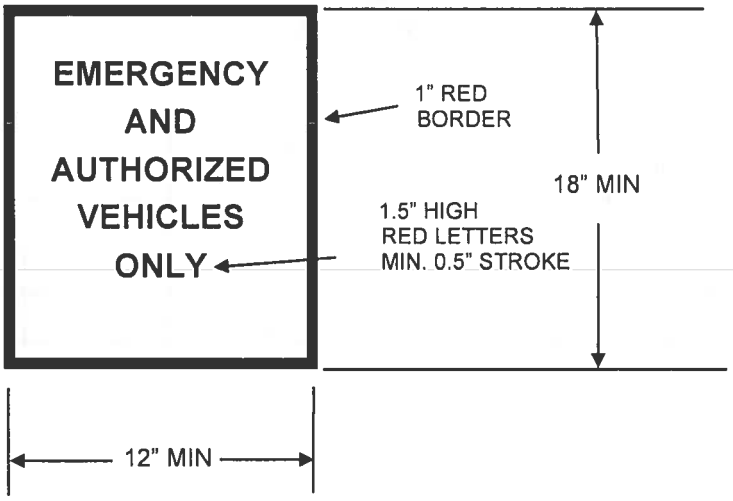

DIAGRAM A-3.2 ENTRY GATE STACKING

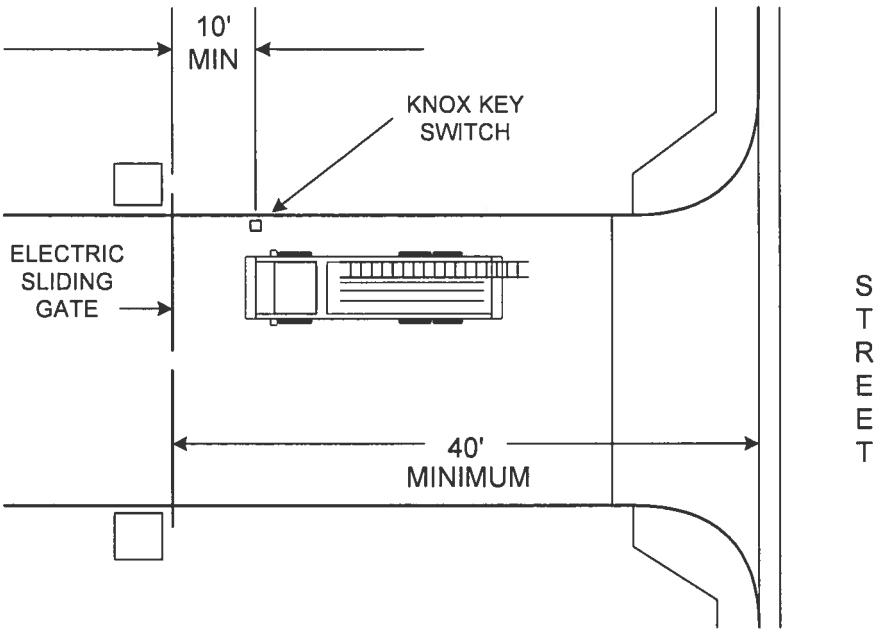

SAN BERNARDINO COUNTY FIRE DEPARTMENT
COMMUNITY SAFETY DIVISION

620 South 'E' Street
San Bernardino, CA 92415-0179
(909) 386-8400

Standard Number
A-3

FIRE PREVENTION STANDARD

GATES AND OTHER OBSTRUCTIONS TO FIRE DEPARTMENT ACCESS

DIAGRAM A-3.3 ELECTRICALLY OPERATED GATE

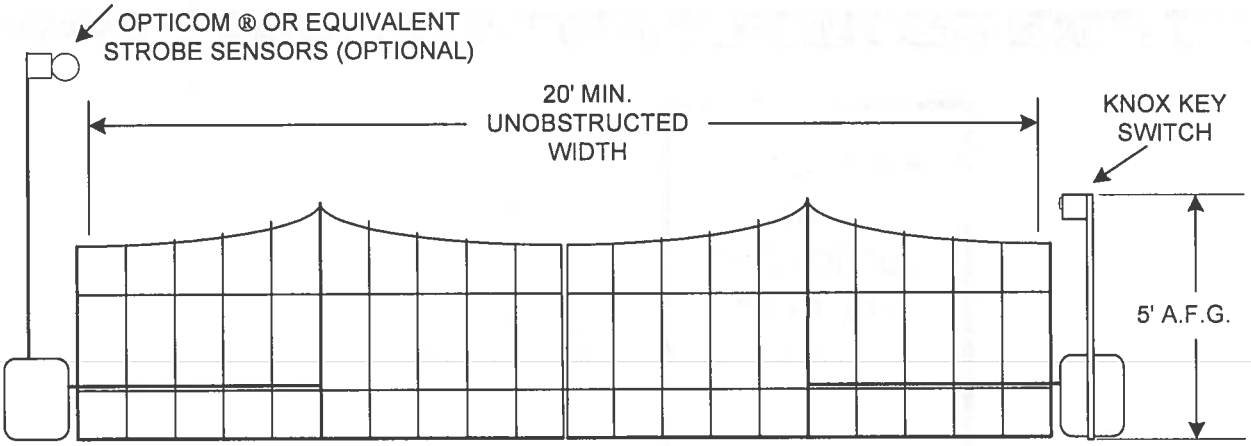

DIAGRAM A-3.4 SPEED HUMP

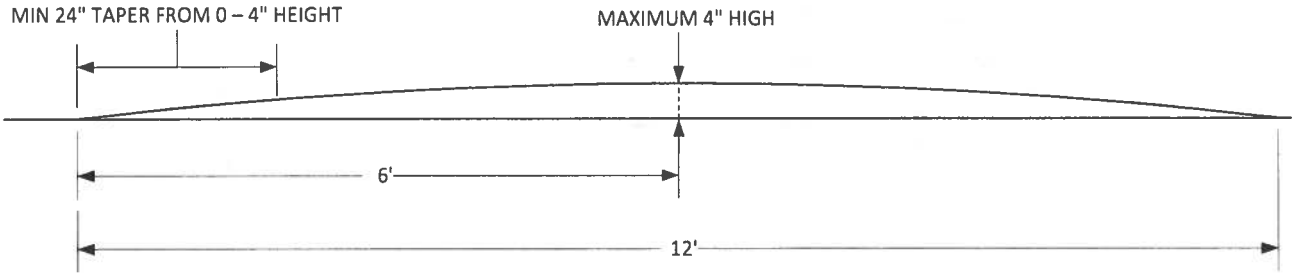

SAN BERNARDINO COUNTY FIRE DEPARTMENT
COMMUNITY SAFETY DIVISION

620 South 'E' Street
San Bernardino, CA 92415-0179
(909) 386-8400

Standard Number
A-3

FIRE PREVENTION STANDARD

GATES AND OTHER OBSTRUCTIONS TO FIRE DEPARTMENT ACCESS

DIAGRAM A-3.5 SPEED HUMP STRIPING

([TOP VIEW)

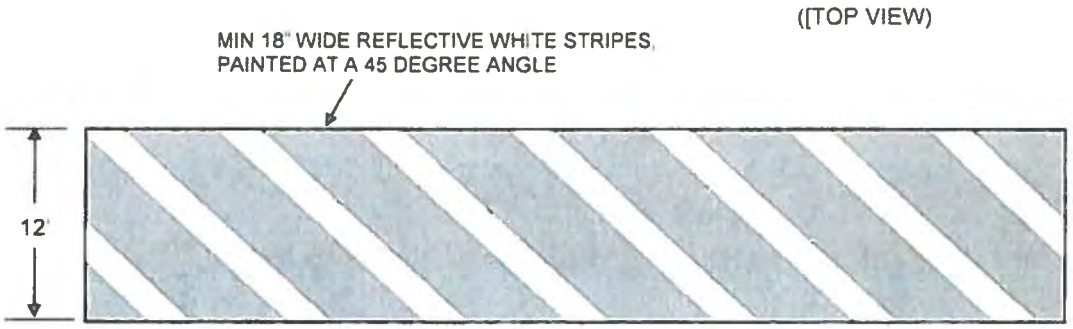

APPROVED BY:

Michael Horton, Fire Marshal — Date: 8-5-15

Mark Hartwig, Fire Chief — Date: 8-6-2015

SAN BERNARDINO COUNTY FIRE DEPARTMENT
COMMUNITY SAFETY DIVISION

620 South 'E' Street
San Bernardino, CA 92415-0179
(909) 386-8400

Standard Number
W-1

FIRE SAFETY STANDARD

WATER SUPPLY FOR RESIDENTIAL FIRE PROTECTION

AUTHORITY

Sections 102.9, 103 & 104 of the 2013 California Fire Code provides that the fire code official of the San Bernardino County Fire Department shall have the authority to adopt policies, procedures, rules, and regulations in order to clarify the application of the Fire Code and to specify requirements not specifically provided for by the Fire Code. For further requirements on this subject, see section 507 of the 2013 California Fire Code.

PURPOSE

The purpose of this standard is to serve as an alternate guideline to NFPA 1142 for establishing a fire protection water supply for single family residential occupancies in areas not served by a water purveyor.

SCOPE

This standard applies to new single family dwellings, two family dwellings, and non-dwelling accessory structures within areas that have no water purveyor capable of providing an adequate water supply for firefighting purposes, as determined by the requirements in the Fire Code.

DISCLAIMER

These standards may change without notice. Whenever applicable statutes, regulations and standards are updated and adopted, the most updated shall apply. Please contact the Community Safety Division at (909) 386-8400 to determine if these standards have changed.

These requirements do not exempt any individual from complying with other applicable state, county, or city codes and standards.

SUBMITTALS

Plans for water tanks and appurtenances shall be submitted to the Fire Department for review, approval and permit prior to installation.

The submittal shall contain, at a minimum, the following:

1) Locations and elevations of all structures, including dwellings and any accessory structures
2) Locations and elevations of all fire department access roads, including any obstructions to fire access (See SBCFD Standards A-2 and A-3 for more information)
3) Location, size and elevation of water tank(s)
4) Location, size, and type of Fire Department Hose Connection (FDHC)
5) Location, size and type of any underground fire protection water piping
6) Details of any methods for freeze protection used
7) Any other significant information required in this Standard

SAN BERNARDINO COUNTY FIRE DEPARTMENT
COMMUNITY SAFETY DIVISION

620 South 'E' Street
San Bernardino, CA 92415-0179
(909) 386-8400

Standard Number
W-1

FIRE SAFETY STANDARD

WATER SUPPLY FOR RESIDENTIAL FIRE PROTECTION

DEFINITIONS

FIRE DEPARTMENT HOSE CONNECTION (FDHC): A connection provided in conjunction with a water storage tank that allows fire fighters to connect and obtain needed water for fire-fighting purposes.

FIRE PROTECTION WATER SUPPLY: A water supply provided for firefighting purposes only. Water required for domestic, industrial, landscaping, agricultural or any other use are in addition to a fire protection water supply..

SELF-CONTAINED AUTOMATIC FIRE SPRINKLER SYSTEM: A fire sprinkler system that is supplied from a water source that is not dependent on a municipal (public) system and that consists of a water storage tank and a reliable method of pressurizing water, such as gravity, booster pump with emergency power, or pressurized cylinder.

WHARF HYDRANT: A fire hydrant with minimum four inch (4") underground supply piping and with a single two and one-half inch (2-1/2") outlet.

GENERAL

1) In areas without a water purveyor, an approved self-contained automatic fire sprinkler system shall be required. If, in the opinion of the fire code official it becomes impractical to install an automatic fire sprinkler system, or an automatic sprinkler system is required by other portions of the Fire Code, an onsite water storage tank with a minimum of 5,000 gallons fire protection water supply shall be required in a location approved by the fire code official and meeting all of the requirements of this standard, provided all the conditions below are met:
    a) It is a residential building not more than two (2) stories in height or 35 ft. in height
    b) It requires a fire flow, per Appendix B the California Fire Code, of not more than 1,000 gallons per minute
    c) Structures being protected that contain dwelling units are separated from property lines and other dwelling units and structures, not including accessory structures located on the same property, by a distance of a least fifty (50) feet.

FIRE DEPARTMENT HOSE CONNECTIONS

1) FDHC's shall be installed within ten feet (10') of the driveway or access road, no closer than twenty five feet (25') and no farther than one hundred fifty feet (150') from structures to be protected. **See Diagram W-1.1.**

2) Fire Department Hose Connections shall be installed so that there is an elevation difference of thirty six inches (36") minimum between the FDHC and the bottom of the water tank, for effective gravity flow, unless an approved fire pump is provided. **See Diagram W-1.2.**

3) If special conditions preclude the installation of a remote FDHC, an approved two and one-half inch (2-½") National Standard Hose Thread FHDC may be installed on the bottom of a water storage tank when approved by the fire code official. This FHDC must be between six (6") and

eighteen inches (18") from the adjacent ground level, and on the same side of the tank as a fire access roadway, and shall be a minimum of ten feet (10') higher in elevation from the access roadway or protected structure for effective gravity flow. **See Diagram W-1.2.**

4) FDHC's shall be National Standard Hose Thread, two and one-half inch (2 ½") in size, and listed for fire service use. A wharf hydrant or equivalent assembly shall be acceptable within the scope of this standard. The FDHC outlet shall be installed between twelve (12") and twenty four inches (24") above adjacent grade level.

5) When subject to the possibility of vehicle impact, FHDCs shall be protected by approved bollards. Bollards shall be installed in accordance with the current edition of NFPA Standard 24. **See Diagram W-1.3.**

6) Fire Department Hose Connections shall be painted red. An approved blue reflective marker shall be installed on the roadway nearest the FHDC. In areas prone to snowfall, an approved snow marker shall be installed (an approved visual pole with a reflective top above snow level shall be installed for location of FDHC).

FDHC's shall be installed so that a clear space having a radius of three feet (3') from connections is maintained free of obstructions, such as landscaping or parking, at all times.

SUPPLY PIPING

1) All piping supplying FDHC's shall be a minimum of four inches (4") in size, and shall be of approved schedule 40 CPVC plastic. Pipe shall be buried at a minimum of twenty four inches (24") below grade level, or below frost level as specified in the current edition of NFPA standard 24, whichever is greater. Where piping passes under areas subject to vehicular traffic, the minimum depth of bury shall be thirty six inches (36") below grade, or below frost level, whichever is greater.

2) The system shall be designed and installed so that the integrity of the piping and the connection of all appurtenances allow for a proper draft to be initiated and maintained at all times.

WATER TANKS

SAN BERNARDINO COUNTY FIRE DEPARTMENT
COMMUNITY SAFETY DIVISION

620 South 'E' Street
San Bernardino, CA 92415-0179
(909) 386-8400

FIRE SAFETY STANDARD

WATER SUPPLY FOR RESIDENTIAL FIRE PROTECTION

1) Fire protection water supply tanks shall be constructed of approved plastic, metal, cement, or other material and listed for fire department use.
2) Water tanks shall be installed securely and on flat grade and shall be located a minimum of twenty five feet (25') from a structure, and shall be visible from the street on the address side of the structure.
3) Domestic water supplies (including that for irrigation of landscaping) shall not be stored in fire protection water supply tanks unless it can be shown that adequate water can be provided to satisfy all current and future domestic needs in addition to that required for fire protection, but in all cases the water capacity of the tank shall be increased to a minimum seven thousand five hundred (7,500) gallons with a minimum of 5,000 gallons for fire protection supply only.
4) When the fire protection supply and domestic water supply are in the same tank, an approved low level water alarm device shall be installed and set so as to activate when the supply in the tank is 5,000 gallons or less. Such alarm shall be sounded locally within the primary dwelling on the property or shall have an automatic refill system from the domestic line from the water supply on site. Tanks supplying water for fire protection purposes shall be maintained at full.

FIRE PUMPS

1) Any proposed fire pumps that take suction from water tanks in order to maintain proper head pressure must be listed and approved for fire protection use. Fire pumps shall be tested prior to final acceptance.
2) Fire pumps shall serve a combination of both domestic and fire protection needs, or shall have an approved emergency power source if serving fire protection demand only.

TANK VALVES

1) Control valves shall be provided for all installations. Valves shall be of the indicating type and locked in an open position. The following control valves shall be provided:
   a) FDHC control valve. This valve located between the tanks and the FDHC outlet shall be placed at location(s) approved by the (fire code official).
   b) Water Source Control Valves. One shall be provided to isolate tanks from water fill sources.
   c) Fire Pump Bypass Control Valves. This valve shall be installed when pumps are installed that take suction from water tanks, and shall be located on the supply side of pump intake lines and bypass water lines. No other control valve shall be on the system unless approved by fire code official. **See Diagram W-1.4**

SIGNAGE

FIRE SAFETY STANDARD

WATER SUPPLY FOR RESIDENTIAL FIRE PROTECTION

1) Water storage tanks shall be labeled with signage stating "FIRE PROTECTION WATER SUPPLY" per **Diagram W-1.5**. Letters shall be white with red background and shall be reflective.
2) FDHC valves shall be labeled with signage indicating the address of the property that is served, stating "FIRE DEPARTMENT HOSE CONNECTION" per **Diagram W-1.5**. Numbers and letters shall be white with red background and shall be reflective.

PROTECTION FROM FREEZING

1) Water tanks and all valves and piping shall be protected from freezing when installed at or above an altitude of three thousand five hundred feet (3,500') above sea level. Freeze protection shall be accomplished using one or more of the following methods, subject to the approval of the fire code official:
   a) Insulation installed around water tanks and piping
   b) Piping installed without water (dry), but capable of completely filling with water when valves are opened
   c) An approved mixture of antifreeze (1:1 ratio) added to water supplies.

INSPECTION AND MAINTENANCE

1) All fire protection water supplies within the scope of this standard shall be subject to inspection by the Fire Department. The final location of Fire Department Hose Connections (FHDC's) shall be subject to Fire Department approval.
2) All materials used in tank installations shall be new. Storage tanks shall be full of water at time of Fire Department inspection, and if used with domestic supply, a low-level alarm test shall be conducted at final. If FDHC is not attached to the tank, the installer shall leave trench open for inspection of underground piping.
3) Foundations for tanks shall be subject to permits from the Building and Safety Department.
4) Water storage tanks, connections and valves shall be maintained in an operable, full and ready condition at all times.

DIAGRAM W-1.1: FIRE DEPARTMENT HOSE CONNECTION INSTALLATION

DIAGRAM W-1.2: GRAVITY FLOW INSTALLATION METHOD

DIAGRAM W-1.3: PROTECTIVE BOLLARD DETAILS

DIAGRAM W-1.4: VALVE LOCATIONS AND TYPES

DIAGRAM W-1.5: SIGNAGE DETAILS

SAN BERNARDINO COUNTY FIRE DEPARTMENT
COMMUNITY SAFETY DIVISION

620 South 'E' Street
San Bernardino, CA 92415-0179
(909) 386-8400

Standard Number
W-1

FIRE SAFETY STANDARD

WATER SUPPLY FOR RESIDENTIAL FIRE PROTECTION

APPROVED BY:

Mike Horton, Fire Marshal — Date: 8-5-15

Mark Hartwig, Fire Chief — Date: 8-6-2015

SAN BERNARDINO COUNTY FIRE DEPARTMENT
COMMUNITY SAFETY DIVISION

620 South 'E' Street
San Bernardino, CA 92415-0179
(909) 386-8400

Standard Number
W-2

FIRE SAFETY STANDARD

ONSITE FIRE PROTECTION WATER SYSTEMS

AUTHORITY

Sections 102.9, 103 and 104.1 of the 2013 California Fire Code provides that the fire code official of the San Bernardino County Fire Department shall have the authority to adopt policies, procedures, rules, and regulations in order to clarify the application of the Fire Code and to specify requirements not specifically provided for by the Fire Code. For further requirements on this subject, see section 508 of the 2013 California Fire Code.

PURPOSE

The purpose of this standard is to serve as an alternate guideline to NFPA 24 for establishing a onsite private water supply capable of providing an adequate water supply for firefighting purposes, as determined by the requirements in the Fire Code.

SCOPE

This standard establishes minimum requirements for installation and maintenance of all private hydrants.

DISCLAIMER

These standards may change without notice. Whenever applicable statutes, regulations and standards are updated and adopted, the latest shall apply. Please contact the Community Safety Division at (909) 386-8400 to determine if these standards have changed.

These requirements do not exempt any individual from complying with other applicable state, county, or city codes and standards.

SUBMITTALS

1) Three (3) sets of plans shall be submitted to the Fire Department and/or Fire Consultant for approval. These plans shall illustrate all water lines and their appurtenances and shall establish the required fire flow needed for the proposed project(s).
2) These plans shall be designed by a licensed fire protection engineer for certification that the required fire flows shall be provided. The plans shall bear the seal and signature of the registered engineer and the water company having jurisdiction if the system is public.
3) The engineer responsible for the design shall provide a certification statement with the following text verbatim: *"I certify that the design of the water system is in accordance with the requirements prescribed by the San Bernardino County Fire Department."*
4) No work shall commence until plans are approved by the Fire Department and/or the water company having jurisdiction.

GENERAL

1) Underground water supply systems shall be designed and installed in accordance with the latest edition of NFPA 24, and San Bernardino County Fire Department Standard W-1 for all commercial/industrial, single family residential development and multi-family projects. No deviations from these recognized standards will be made without approval from the San Bernardino County Fire Department.

SAN BERNARDINO COUNTY FIRE DEPARTMENT
COMMUNITY SAFETY DIVISION

620 South 'E' Street
San Bernardino, CA 92415-0179
(909) 386-8400

Standard Number
W-2

FIRE SAFETY STANDARD

ONSITE FIRE PROTECTION WATER SYSTEMS

UNDERGROUND PIPING SYSTEMS

1) Projects with a building exceeding 100,000 square feet shall be required to have a looped fire line system and have a minimum of two (2) points of connection to the public water source.
2) Underground pipe shall be laid with the identification data facing up to permit inspection and verification of pipe nomenclature.

FIRE HYDRANT DISTANCES

1) All fire hydrants, public and private, shall be located within one hundred fifty (150) feet from all portions of the building(s) to be protected, as measured along approved fire apparatus access routes.
2) In no case shall fire hydrants be closer than twenty-five (25) feet to any building. Public fire hydrants installed to support a fire sprinkler system shall not exceed fifty (50) feet from the fire department connection (FDC) nor be closer than three (3) feet to the FDC.
3) All fire hydrants shall have a clear space of three (3) feet to any obstructions (fences, structures, vegetation, street lights, mailboxes, etc).

FIRE HYDRANT SPACING

FIRE SAFETY STANDARD

ONSITE FIRE PROTECTION WATER SYSTEMS

1) RESIDENTIAL AREAS (SINGLE-FAMILY):

   a) Single-family residential developments may increase the spacing between hydrants to be no more than six hundred (600) feet and the hydrant shall not be more than three hundred (300) feet (as measured along vehicular travel-ways) to main driveway on the address side of the proposed single-family structure.

   b) Distance from hydrant to the main driveway on the address side on an approved access road may be increased to six hundred (600) feet with automatic fire sprinklers provided in the buildings to be protected.

   c) In the City of Adelanto single-family residential developments shall space the hydrants no more than three hundred (300) feet apart and the hydrant shall not be more than one hundred and fifty (150) feet (as measured along vehicular travel-ways) to main driveway on the address side of the proposed single-family structure.

2) MULTIPLE RESIDENTIAL, INDUSTRIAL AND COMMERCIAL AREAS:

   a) Public fire hydrants shall be installed on public streets at distances no greater than three hundred (300) feet between each appliance.

   b) Public fire hydrants shall be required on both sides of a public street, if the public right-of-way exceeds eighty (80) feet in width.

   c) Private on-site fire hydrants may be required if any portion of the building(s) to be protected exceeds one hundred fifty (150) feet from the public fire hydrant as measured along approved fire apparatus access routes.

HYDRANT SIZE, INSTALLATION, LOCATION AND TYPE

FIRE SAFETY STANDARD

ONSITE FIRE PROTECTION WATER SYSTEMS

1) The centerline of the riser shall be normally two (2) feet behind the curb face, except where a five (5) foot sidewalk is adjacent to the curb, in which case the riser shall be at six and one-half (6 1/2) feet behind the curb face. Where the sidewalk adjacent to the curb is greater than five (5) feet; as in commercial areas, the centerline of the riser shall be placed two (2) feet behind the curb face.
2) In the absence of a curb, set bottom outlet twenty four (24) inches above the crown of the road and provide steel pipe barricades, four (4) inches in diameter filled with concrete, three (3) feet from the hydrant so as not to obstruct the outlets and valve nuts. Where curbs exist, the centerline of the bottom outlet must be twenty (20) inches above the finished grade.
3) No fire hydrant shall be installed closer than five (5) feet from the edge of driveway aprons.
4) Fire hydrants on cul-de-sac shall be located between the short portions of 2 driveways and shall not be located at the end of the cul-de-sac. On main line extensions fire hydrants shall not be located at the end of the waterline.
5) Wet barrel fire hydrants shall be manufactured to ANSI and AWWA standards. The six (6) inch riser and outlets (two - 2 1/2 inch and one - 4 inch) shall be cast as an integral part of the head. They shall be fastened / locked to the head in such a manner to prevent the unintentional removal of the outlets out of the head.
6) Private dry barrel fire hydrants in areas subject to freezing shall meet the same specifications as local public dry barrel fire hydrants maintained by the local water purveyor. In no case shall a dry barrel hydrant be less than 6" x 4" x 2 ½" x 2 ½".
7) Manufacturer's specifications of fire hydrants shall be submitted to the fire code official upon request.
8) All hydrants on private property shall be an approved hydrant with breakaway bolts.
9) Public and on site fire hydrants that supply buildings in excess of 100,000 sq.ft. or 2500 GPM shall be required an additional four- (4) inch outlet on the six (6) inch riser (6"x4"X4"x2½") super hydrant, as determined by the fire flow requirements for higher potential water flow. Underground mains shall be a minimum of ten (10) inch with eight (8) inch laterals.
10) The exterior of the hydrant head including the riser, excluding the threads, shall be painted with two coats of primer and two coats of yellow paint.

FIRE SAFETY STANDARD

ONSITE FIRE PROTECTION WATER SYSTEMS

1) Multi-Residential and Commercial-Industrial water main size shall be determined by the required fire flow.
2) Flow tests shall be made by flowing fire hydrants of all new water distribution systems constructed in accordance with approved water plans. The tests shall be observed by the Fire code official and calculated to establish adequate water is provided prior to final inspection.

HYDRANT MARKERS

1) The developer/contractor shall install blue reflective markers in accordance with the following specifications: (need a diagram)
    a) Markers shall be Ray-O-Lite 2SRPM-DB or equivalent.
    b) Adhesive shall be Ray-O-Lite 2SRMESS1 or equivalent.
2) Location of pavement markers:
    a) Markers shall be placed eighteen (18) inches from the painted center line (CL) or if no painted CL exists, eighteen (18) inches from the center of the roadway on the side nearest the hydrant.
    b) On a four- (4) lane street with turn lane at the intersection, the marker shall be eighteen (18) inches from the edge of the turn lane on the side nearest the hydrant.
    c) Streets with a median having a hydrant on the roadside, shall have markers placed eighteen (18) inches from the edge of the painted line closest to, and on the side nearest the hydrant.
    d) Hydrants at an intersection shall have markers placed on both streets.
    e) Hydrants on a median shall have a marker eighteen (18) inches from the median edge on both sides of the median.
    f) For multi-lane streets with a center turn lane not at an intersection, the marker shall be eighteen (18) inches from the edge of the turn lane on the side nearest the hydrant.

SYSTEM TESTING

1) All underground piping shall be hydrostatically tested and flushed prior to connection to any overhead sprinkler piping.
2) It is the underground contractor's responsibility to give proper notification of these tests prior to any piping being concealed.

SPECIAL CONCERNS

1) Special hazard areas, high-rise buildings and other areas of fire protection not covered in this standard may require special consideration. The contractor is encouraged to contact the Fire Code Official regarding these areas not covered in this standard.

SAN BERNARDINO COUNTY FIRE DEPARTMENT
COMMUNITY SAFETY DIVISION

620 South 'E' Street
San Bernardino, CA 92415-0179
(909) 386-8400

Standard Number
W-2

FIRE SAFETY STANDARD

ONSITE FIRE PROTECTION WATER SYSTEMS

APPROVED BY:

Mike Horton, Fire Marshal — Date: 8-5-15

Mark Hartwig, Fire Chief — Date: 8-6-2015

REPORT/RECOMMENDATION TO THE BOARD OF SUPERVISORS OF SAN BERNARDINO COUNTY, CALIFORNIA AND RECORD OF ACTION

January 28, 2014

FROM: **MARK A. HARTWIG, Fire Chief/Fire Warden**
San Bernardino County Fire Protection District

SUBJECT: **ADOPTION OF AN ORDINANCE AMENDING SECTION 23.0801 OF THE COUNTY CODE RELATING TO ROOF COVERING REQUIREMENTS**

RECOMMENDATION(S)

Adopt **Ordinance No. 4225** amending section 23.0801 of the County Code relating to roof covering requirements which was introduced on January 14, 2014, Item No. 62.
(Presenter: Michael A. Horton, Fire Marshal, 386-8410)

BACKGROUND INFORMATION

The ordinance amending section 23.0801 of the County Code relating to roof covering requirements was introduced on January 14, 2014, Item No. 62. The ordinance extends the date of compliance of the ordinance to July 1, 2016 and provides an exemption to structures registered with the California Register of Historical Resources. The recommendation before the Board of Supervisors today will adopt the ordinance on the Consent Calendar.

cc: w/ordinance
SBCFPD-Hartwig
SBCFPD-Horton
County Counsel-Messer
File - SBCFPD/General w/attach
jr 1/31/14

ITEM 58

Record of Action of the Board of Supervisors

APPROVED (CONSENT CALENDAR)
COUNTY OF SAN BERNARDINO
Board of Supervisors

MOTION	AYE	AYE	MOVE	SECOND	AYE
	1	2	3	4	5

LAURA H. WELCH, CLERK OF THE BOARD

BY _____

DATED: January 28, 2014

Rev 7-1-13

ORDINANCE NO. 4225

AN ORDINANCE OF THE COUNTY OF SAN BERNARDINO, STATE OF CALIFORNIA, AMENDING SECTION 23.0801 OF THE SAN BERNARDINO COUNTY CODE RELATING TO COMPLIANCE WITH ROOF COVERING REQUIREMENTS.

The Board of Supervisors of the County of San Bernardino, State of California, ordains as follows:

SECTION 1. Section 23.0801 of the San Bernardino County Code is amended, to read:

23.0801 Compliance With Roof Covering Requirement Provisions of the County Development Code and California Building Code.

(a) All construction, enlargement, alteration, repair, moving, conversions and/or change of occupancy that increases the footprint and/or causes a change in the roofline greater than ten percent (10%) of the existing roofline or 200 square feet, whichever is smaller, of buildings and/or structures within the Fire Safety Overlay as defined in Section 82.13.030 of the County Development Code and mapped on the Hazard Overlay Maps of the County General Plan, shall, as to the entire roof structure, be in compliance with the County Development Code, Section 82.13.060(d)(5), which requires that such roof coverings be either noncombustible or shall be fire retardant material not composed of organic fiber with a minimum Class A rating, as defined in the California Building Code. All applicable provisions of the California Building Code and Development Code shall apply prior to issuance of building permits to property owners. When the provisions of the California Building Code, as adopted by the County of San Bernardino, are in conflict with these provisions, the more restrictive in terms of fire resistance and/or fire retardant shall apply.

2B96312:CAG

(b) All properties within the San Bernardino County Fire Safety Overlay as defined in section 82.13.030 of the County Development Code shall be in compliance with the County Development Code, Section 82.13.060(d)(5), prior to July 1, 2016. All applicable provisions of the California Building Code and County Development Code shall apply prior to issuance of building permits to property owners. Structures registered in the California Register of Historical Resources or other state or federal government register are exempt from this provision as per Section 18954 and 18955 of the California's State Historical Building Code.

Properties failing to meet these standards shall be deemed not in compliance and, as such, property owners are subject to available enforcement actions, including, but not limited to, a misdemeanor.

SECTION 2. This ordinance shall become effective thirty (30) days from the date of adoption.

Janice Rutherford

JANICE RUTHERFORD, Chair

SIGNED AND CERTIFIED THAT A COPY OF THIS DOCUMENT HAS BEEN DELIVERED TO THE CHAIR OF THE BOARD

LAURA H. WELCH, Clerk of the Board of Supervisors of the County of San Bernardino

Laura H. Welch

2B96312:CAG

STATE OF CALIFORNIA)
) ss.
COUNTY OF SAN BERNARDINO)

I, LAURA H. WELCH, Clerk of the Board of Supervisors of the County of San Bernardino, State of California, hereby certify that at a regular meeting of the Board of Supervisors of said County and State, held on the 28th day of January, 2014, at which meeting were present Supervisors: Lovingood, Rutherford, Ramos, Ovitt, Gonzales, and the Clerk, the foregoing ordinance was passed and adopted by the following vote, to wit:

AYES: SUPERVISORS: Lovingood, Rutherford, Ramos, Ovitt, Gonzales

NOES: SUPERVISORS: None

ABSENT: SUPERVISORS: None

IN WITNESS WHEREOF, I have hereunto set my hand and affixed the official seal of the Board of Supervisors this 28th of January, 2014.

LAURA H. WELCH, Clerk of the Board
of Supervisors of the County of San Bernardino,
State of California

Deputy

Approved as to Form:

JEAN RENE BASLE
County Counsel

By:
KENNETH C. HARDY
Deputy County Counsel

Date: 1/9/14

2B96312:CAG

REPORT/RECOMMENDATION TO THE BOARD OF SUPERVISORS
SAN BERNARDINO COUNTY, CALIFORNIA
AND RECORD OF ACTION

October 7, 2008
Continued from Tuesday, September 23, 2008, Item 83

FROM: **DENNIS HANSBERGER, Third District Supervisor**
Board of Supervisors

SUBJECT: **2nd Reading/Final Adoption - ORDINANCE PERTAINING TO THE ABATEMENT OF FIRE HAZARDS AND HAZARDOUS TREES AND FIRE ACCESS ROAD OBSTRUCTIONS**

RECOMMENDATION(S)
Adopt **Ordinance No. 4058** amending Sections 23.0301, 23.0304, 23.0307 and 23.0308 of Chapter 3 of Division 3 of Title 2 of the San Bernardino County Code relating to abatement of fire hazards and hazardous trees and fire access road obstructions.
(Presenter: Peter S. Brierty, Assistant Chief/Fire Marshal, 909-936-5533)

BACKGROUND INFORMATION
The proposed ordinance amending relating to abatement of fire hazards and hazardous trees and fire access road obstructions had its first reading on September 23, 2008. The recommendation before the Board of Supervisors today will adopt this ordinance on the consent calendar.

SUPERVISORIAL DISTRICT(S)
All

w/ Ordinance
cc: Co. Fire-Brierty
BOS 3rd-Hansberger
Co. Counsel-Messer
Co. Counsel-Hardy
CAO-Thies
File-SDD-Fire Districts-SBCFPD
ed 10/8/08
Ordinance No. 4058
ITEM 107

Rev 0708R1

Record of Action of the Board of Supervisors

APPROVED (CONSENT CALENDAR)
COUNTY OF SAN BERNARDINO
Board of Supervisors

MOTION	AYE	AYE	SECOND	ABSENT	MOVE
	1	2	3	4	5

DENA M. SMITH, CLERK OF THE BOARD

BY _____

DATED: October 07, 2008

ORDINANCE NO. 4058

AN ORDINANCE OF THE COUNTY OF SAN BERNARDINO, STATE OF CALIFORNIA, AMENDING SECTIONS 23.0301, 23.0304, 23.0307 AND 23.0308 OF CHAPTER 3 OF DIVISION 3 OF TITLE 2 OF THE SAN BERNARDINO COUNTY CODE, RELATING TO ABATEMENT OF FIRE HAZARDS AND HAZARDOUS TREES AND FIRE ACCESS ROAD OBSTRUCTIONS.

The Board of Supervisors of the County of San Bernardino, State of California, ordains as follows:

SECTION 1. Section 23.0301 of Chapter 3 of Division 3 of Title 2 of the San Bernardino County Code is amended, to read:

23.0301 Duty to Abate Fire Hazards or Hazardous Trees.

Every owner or person in control of any land or interest therein in the unincorporated area of the County of San Bernardino shall abate all fire hazards and hazardous trees from such land and from all sidewalks, parkways, road easements and all other easements on such land. All such fire hazards and hazardous trees are declared to be a public nuisance for which the costs of abatement may be specially assessed pursuant to Government Code Section 25845. To provide firefighters defensible space and to minimize the spread of fire within one hundred (100) feet of a building or structure and pursuant to the California Public Resources Code Section 4291, every owner and person in control of any buildings or structures in, upon, or adjoining any mountainous area, forest-covered lands, brush-covered lands, grass-covered lands, or any land that is covered with flammable material within the unincorporated area of the County of San Bernardino shall at all times do the following:

(a) Maintain a firebreak by removing and clearing away, for a distance of not less than thirty (30) feet on each side of the building or structure or to the property line, whichever is nearer, all flammable vegetation or other combustible growth. Single specimens of trees or other vegetation may be retained provided they are well-spaced, well-pruned as defined in section 23.0304 for mountain areas in this chapter, and create a condition that avoids spread of fire to other vegetation or to a building or structure.

(b) Provide a fuel break within thirty (30) feet to one hundred (100) feet of a building or structure by disrupting the vertical and/or horizontal continuity of flammable and combustible vegetation with the goal of reducing fire intensity, inhibiting fire in the crowns of trees, reducing the rate of fire spread, and providing a safer environment for firefighters to suppress wildfire and provide structure protection in and around wildland urban interface communities. Additional fire protection or firebreak shall be made by the removal of brush, flammable vegetation, or combustible growth that is located within one hundred (100) feet from the building or structure or to the property line or at a greater distance if provided by law.

(c) Property owners who do fuel reduction activities that remove or dispose of vegetation should make every effort to properly reuse and/or recycle the resultant materials either on site or at an appropriate off site facility, without creating additional fire hazards and are required to comply with all federal, state or local environmental protection laws and obtain permits when necessary. Environmental protection laws include, but are not limited to, threatened and endangered species, water quality, air quality, and cultural/archeological resources.

SECTION 2. Section 23.0304 of Chapter 3 of Division 3 of Title 2 of the San Bernardino County Code is amended, to read:

23.0304 Mountain Area Fire Hazard Abatement.

(a) "Mountain Area" means that portion of the unincorporated area of the County of San Bernardino located within the Fire Safety Overlay of the General Plan, whether publicly or privately owned, and does include National Forest land.

(b) Flammable vegetation which constitutes a fire hazard in the "Mountain Area" means:

(1) All foliage and branches within six (6) feet from the ground on trees over twelve (12) feet in height that stand within one hundred (100) feet of structures. Limbs should be cut no less than one quarter (¼) inch from the trunk of the tree to preserve the health of the tree.

(2) All trees that are within thirty (30) feet of structures that are

smaller than four (4) inches in diameter that stand within ten (10) feet from other trees, not to include ornamental trees that are pruned and free of dead or damaged foliage.

(3) All shrubs that are within fifteen (15) feet of structures that produce high-energy-release components and are considered high fire fuels, not to include low energy release deciduous ornamental plants that are well-pruned, well-spaced and free of dead or damaged foliage. High-energy-release shrubs include, but are not limited to, Manzanita, Service Berry, Mountain Whitethorn, Sage, Ironwood, Juniper Shrubs, Spanish Broom and other species as determined by the County Fire Chief/Fire Warden or their designee to constitute a fire hazard.

(4) All high-energy-release shrubs that are spaced together less than double the size of the height of the tallest shrub and stand between fifteen (15) and thirty (30) feet of structures, (eg. a 4 foot high shrub should be spaced 8 feet or more away from the next shrub, providing that the 4 foot high shrub is the tallest of the two shrubs), not to include ornamental plants that are well-pruned, well-spaced and free of dead or damaged foliage. Planting of native, fire-wise, drought-resistant species is encouraged for the health of the forest.

(5) Lower foliage measured at least eighteen (18) inches up from the ground and all leaf litter and dead vegetation on and under all shrubs that stand within one hundred (100) feet of all structures.

(6) Dead branches and leaf litter in and under all plants, trees, foliage and shrubs and all flammable vegetation at all heights within one hundred (100) feet of all structures.

(7) Tree limbs (not trunks) less than ten (10) feet away from chimneys and stovepipes.

(8) Grass over four (4) inches in height.

(9) Pine needles, leaf litter or chipped/ground mulch on the ground over two (2) inches in depth.

(10) Trunks or branches on the ground less than four inches in diameter, not including split and neatly stacked fire wood.

(c) "Fire Hazard in the Mountain Area" means:

(1) Flammable vegetation within ten (10) feet of a road.

(2) Combustible rubbish, waste or discarded materials.

(3) Leaves, needles or other dead vegetative growth on roofs or structures.

(d) When neighboring persons or properties are especially vulnerable to the effects of fire, including, but not limited to schools, hospitals, mobilehome parks, residential occupancies, it is the responsibility of the property owner to adhere to the provisions of this section when flammable vegetation stands within one hundred (100) feet, measured on the ground, of all neighboring structures. Additional clearance may be required at the discretion of the County Fire Chief/Fire Warden or their designee on buildings listed above that may be used as evacuation centers, medical facilities and/or places of public gatherings and/or critical infrastructure.

SECTION 3. Section 23.0307 of Chapter 3 of Division 3 of Title 2 of the San Bernardino County Code is amended, to read:

23.307 Enforcement.

For the purpose of enforcing this chapter, the County Fire Chief/Fire Warden may designate any person as his/her deputy in the performance of the duties enjoined upon him or her by this chapter. In addition, each of the following officers within the County of San Bernardino is hereby designated to perform the same duties within the territory of the political subdivision which they serve. Whenever the term "County Fire Chief" is used in this chapter, the following officers are included in the meaning of such phrase, except that the County Fire Chief/Fire Warden shall coordinate all such officers in the performance of these duties:

(a) The Deputy Director of Code Enforcement, Fire Hazard Abatement Program and their designees.

(b) The San Bernardino County Land Use Services Director or designee.

(c) Other officers hereafter designated by the Board of Supervisors or the County Fire Chief/Fire Warden.

SECTION 4. Section 23.0308 of Chapter 3 of Division 3 of Title 2 of the San Bernardino County Code is amended, to read:

23.0308 Notice and Order to Abate.

(a) It shall be the duty of the County Fire Chief/Fire Warden or any designated person, whenever such officer deems it necessary to enforce the provisions of this chapter, to issue a "Notice and Order to Abate" by any or all of the following methods:

(1) By mailing a notice to the owner at the address shown on the latest tax roll.

(2) By personal service to the owner as shown on the latest tax roll.

(3) By posting the property.

(b) The form "Notice and Order to Abate Fire" shall include, at a minimum, the following information:

(1) List of hazards.

(2) List of locations.

(3) Due date by which abatement must be completed.

(4) Appeal rights.

(5) Landowner's name and address (situs and assessor's).

(6) Parcel number of affected property.

(c) The Notice and Order to Abate shall be placed in the mail by the issuing agency at least thirty (30) days prior to the "due date" for abatement on the notice.

(d) A ten (10) day extension for compliance is sent when the owner has removed greater than 51% of the fire hazard and notified the agency that the hazard has been abated, but nevertheless the agency determines the fire hazard still exists. A ten (10) day extension for compliance shall be placed in the mail by the issuing agency at least ten (10) calendar days prior to the "due date" for abatement on the notice.

(e) Compliance will be considered "In-Progress" and the Non-Compliance Notice and Order will be held in abeyance if the responsible property owner contracts with

State or Federal agencies or non profit organizations, such as Forest Care or Fire Safe Councils, that are approved by the County Fire Chief/Fire Warden as capable of providing compliance through said contract.

SECTION 5. This ordinance shall take effect thirty (30) days from the date of adoption.

PAUL BIANE, Chairman
Board of Supervisors

SIGNED AND CERTIFIED THAT A COPY
OF THIS DOCUMENT HAS BEEN DELIVERED
TO THE CHAIRMAN OF THE BOARD

DENA M. SMITH, Clerk of the
Board of Supervisors

STATE OF CALIFORNIA)
) ss.
COUNTY OF SAN BERNARDINO)

I, DENA M. SMITH, Clerk of the Board of Supervisors of the County of San Bernardino, State of California, hereby certify that at a regular meeting of the Board of Supervisors of said County and State, held on the 7th day of October, 2008, at which meeting were present Supervisors: Mitzelfelt, Biane, Hansberger and Gonzales, and the Clerk, the foregoing ordinance was passed and adopted by the following vote, to wit:

AYES: SUPERVISORS: Mitzelfelt, Biane, Hansberger, Gonzales

NOES: SUPERVISORS: None

ABSENT: SUPERVISORS: Ovitt

2023606v
2
DMM:jaf

IN WITNESS WHEREOF, I have hereunto set my hand and affixed the official seal of the Board of Supervisors this 7th day of October, 2008.

DENA M. SMITH, Clerk of the
Board of Supervisors of the
County of San Bernardino,
State of California

Deputy

Approved as to Form:
RUTH E. STRINGER,
County Counsel

By: _____
Kenneth C. Hardy
Deputy County Counsel

Date: 9/30/08

2[illegible]606v
2
DMM:jaf